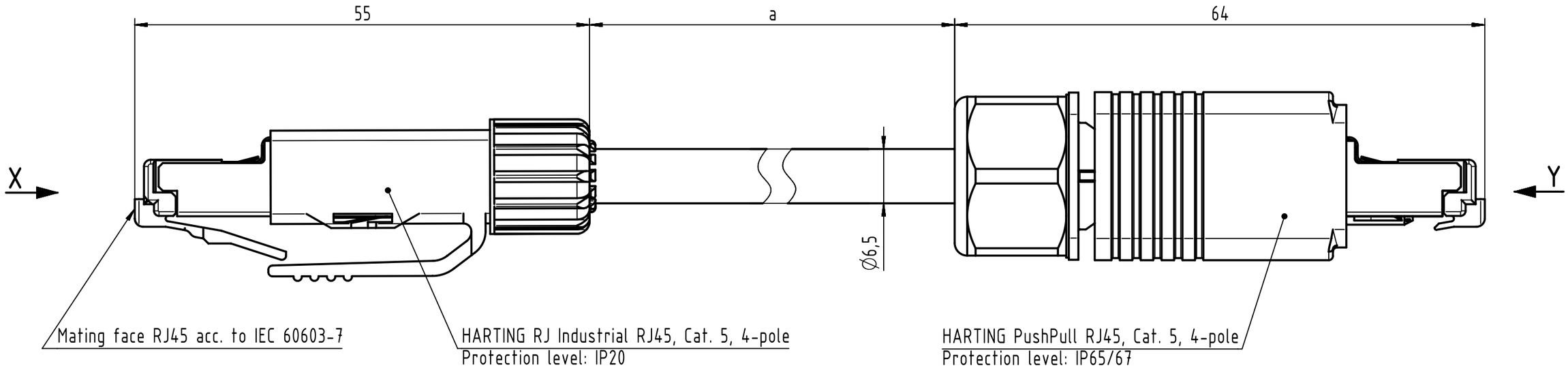

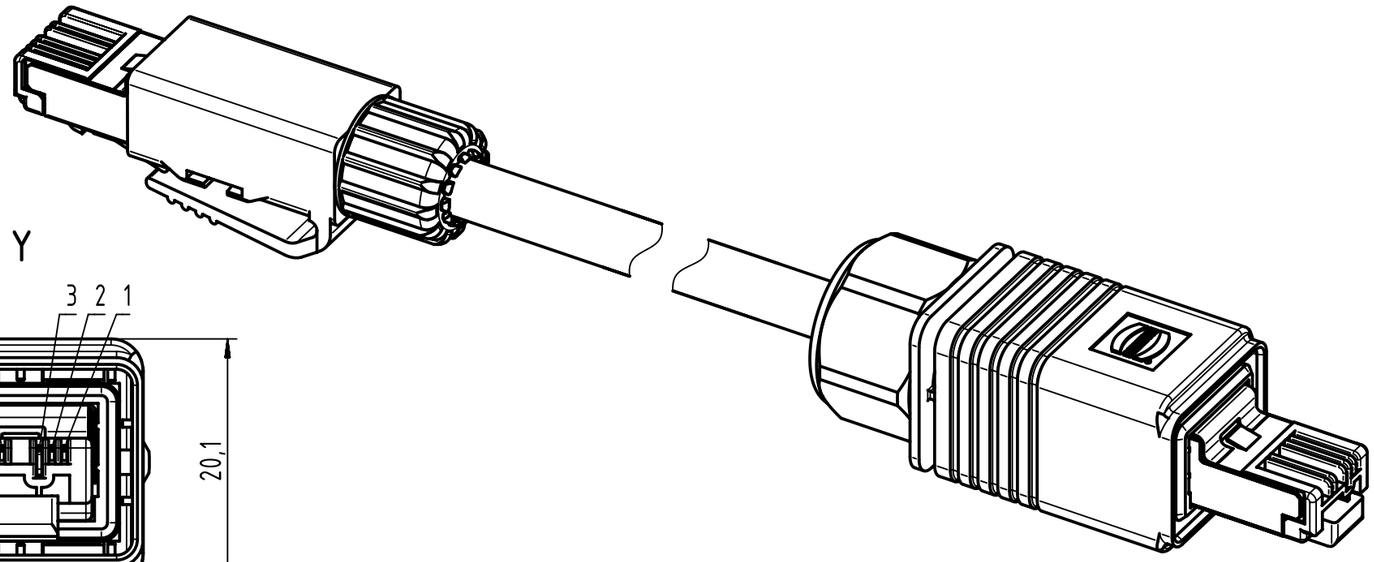

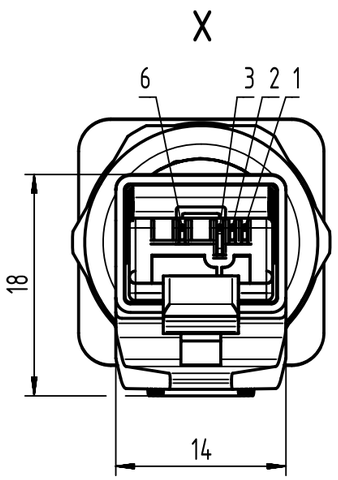

Loading-Plan:

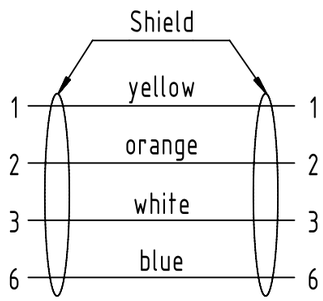

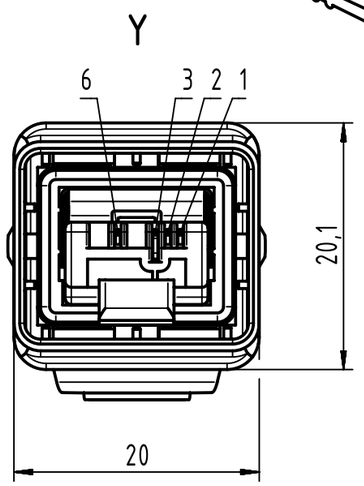

- Temperature range: -40°C ...+70°C

All Dimensions in mm Original Size DIN A3	Scale 2:1	Free size tol.		Ref. Sub.	
All rights reserved Department EC PD - RO	Created by MUNTEANV	Inspected by TAMAS	Standardisation KOHLER	Date 2015-07-24	State Final Release
HARTING Electronics GmbH D-32339 Espelkamp	Title RJ Industrial Cable Assembly				Doc-Key / ECM-Nr. 100155407/UGD/024/C 500000091524
	Type TB	Number 0945701XXXX		Rev. C	Page 1/2

A3

Cont. no.	Part no.	Type of cable	Dim. a[m]
44	09457010083	RJI Ethernet stranded cable, AWG22/7, 2x2x0.75, outdoor, PVC, Cat. 5+, black	100
43	09457010082		90
42	09457010081		80
41	09457010080		70
40	09457010079		60
39	09457010078		50
38	09457010077		40
37	09457010076		30
36	09457010075		20
35	09457010074		15
34	09457010073		10
33	09457010072		9
32	09457010071		8
31	09457010070		7
30	09457010069		6
29	09457010068		5
28	09457010067		4
27	09457010066		3
26	09457010065		2
25	09457010064		1.5
24	09457010063		1
23	09457010062		0.5
22	09457010061	RJI Ethernet trailing cable, AWG22/7, 2x2x0.75, PUR, Cat. 5+, green	100
21	09457010060		90
20	09457010059		80
19	09457010058		70
18	09457010057		60
17	09457010056		50
16	09457010055		40
15	09457010054		30
14	09457010053		20
13	09457010052		15
12	09457010051		10
11	09457010031		9
10	09457010030		8
9	09457010029		7
8	09457010028		6
7	09457010027		5
6	09457010026		4
5	09457010025		3
4	09457010024		2
3	09457010023		1.5
2	09457010022		1
1	09457010021		0.5

Cont. no.	Part no.	Type of cable	Dim. a[m]
88	09457011183	RJI Ethernet stranded cable, 4xAWG22/7, PVC, Cat. 5+, green	100
87	09457011182		90
86	09457011181		80
85	09457011180		70
84	09457011179		60
83	09457011178		50
82	09457011177		40
81	09457011176		30
80	09457011175		20
79	09457011174		15
78	09457011173		10
77	09457011172		9
76	09457011171		8
75	09457011170		7
74	09457011169		6
73	09457011168		5
72	09457011167		4
71	09457011166		3
70	09457011165		2
69	09457011164		1.5
68	09457011163		1
67	09457011162		0.5
66	09457011161	RJI Ethernet standard cable, AWG22/1, 2x2x0.64, PVC, Cat. 5+, green	100
65	09457011160		90
64	09457011159		80
63	09457011158		70
62	09457011157		60
61	09457011156		50
60	09457011155		40
59	09457011154		30
58	09457011153		20
57	09457011152		15
56	09457011151		10
55	09457011131		9
54	09457011130		8
53	09457011129		7
52	09457011128		6
51	09457011127		5
50	09457011126		4
49	09457011125		3
48	09457011124		2
47	09457011123		1.5
46	09457011122		1
45	09457011121		0.5

All Dimensions in mm
Original Size DIN A3

Scale 1:1 | Free size tol. | Ref. | Sub.

All rights reserved

Department EC PD - RO

HARTING Electronics GmbH
D-32339 Espelkamp

Created by	Inspected by	Standardisation	Date	State
MUNTEANV	TAMAS	KOHLER	2015-07-24	Final Release

Title: RJ Industrial Cable Assembly

Doc-Key / ECM-Nr.: 100155407/UGD/024/C 500000091524

Type: TB | Number: 0945701XXXX | Rev.: C | Page: 2/2

A3