ISSUE DATE: 06/06/2014

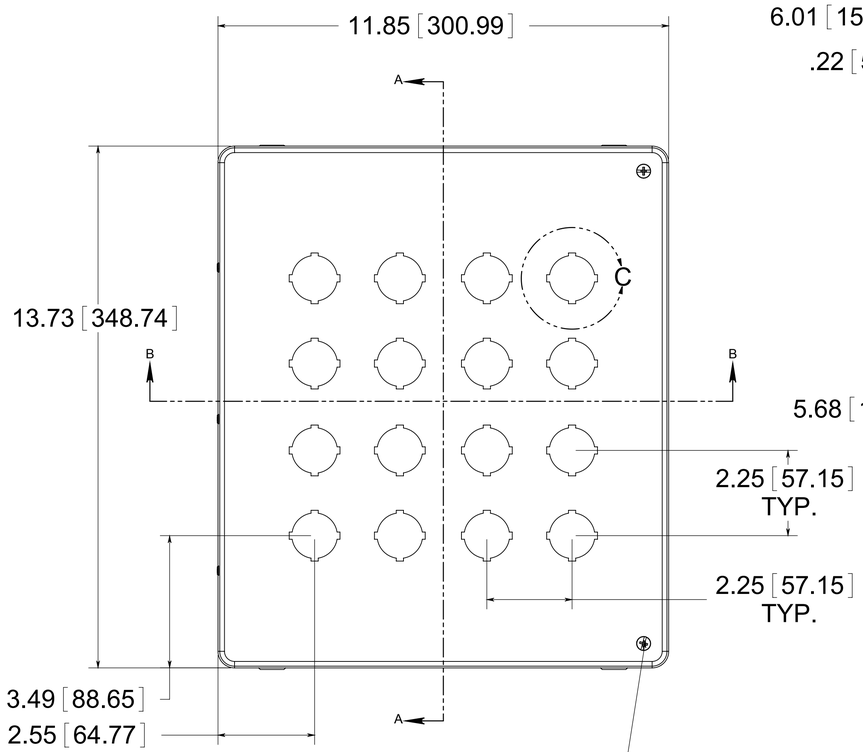

(2) EACH #10-32 BRASS INSERTS AND STAINLESS STEEL CAPTIVE COVER SCREWS WITH RETAINING O-RING

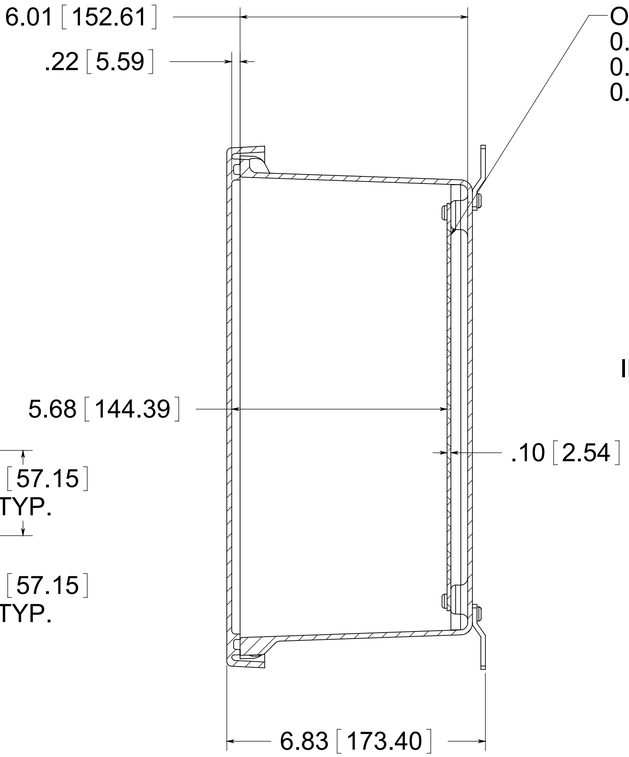

OPTIONAL BACK PANEL
0.100 [2.54] TH'K- ALUMINUM
0.075 [1.91] TH'K- WHITE STEEL-GALVANNEALED
0.125 [3.18] TH'K- FIBERGLASS

FRONT VIEW
WITH COVER REMOVED
AND BACK PANEL SHOWN

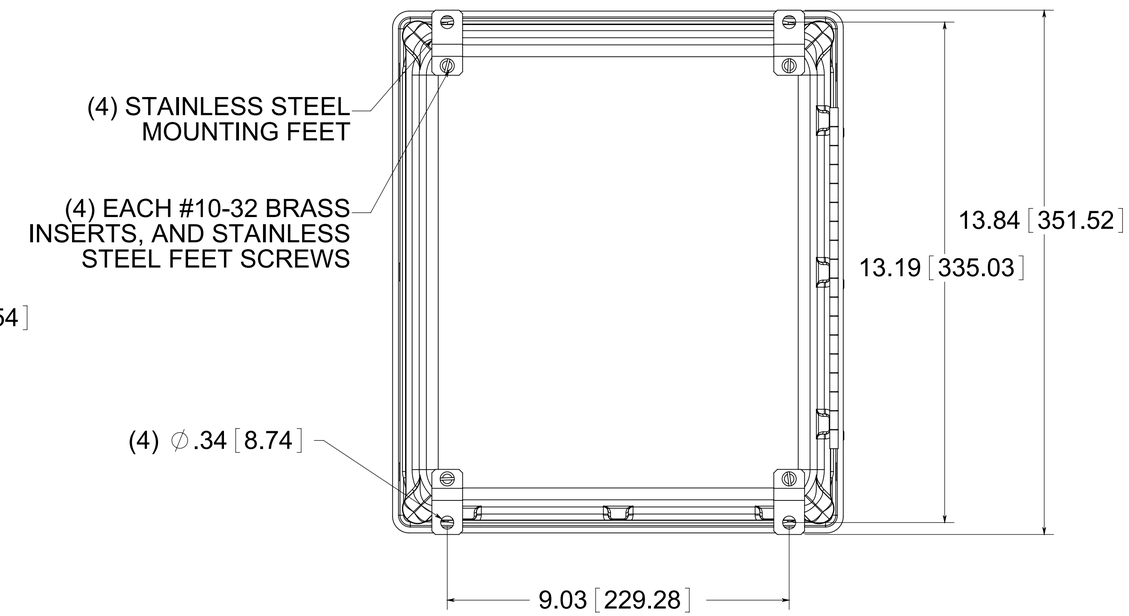

BACK VIEW

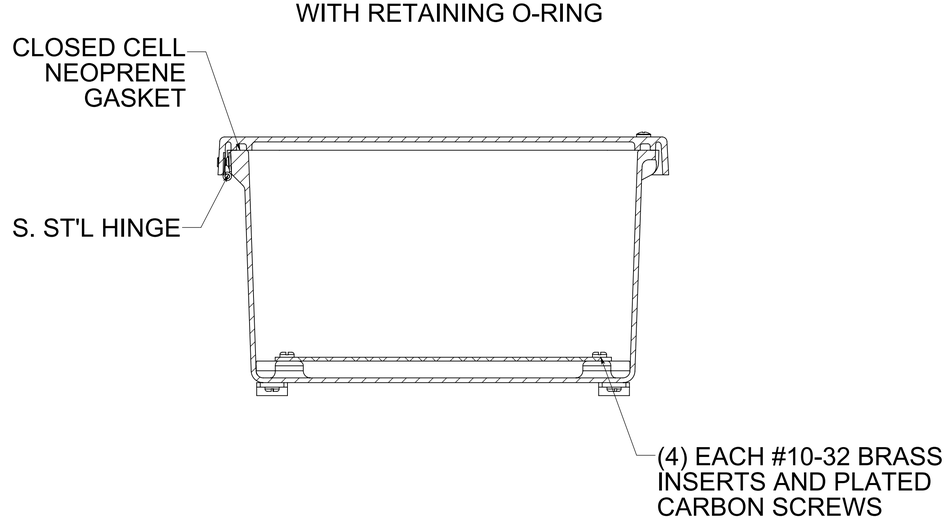

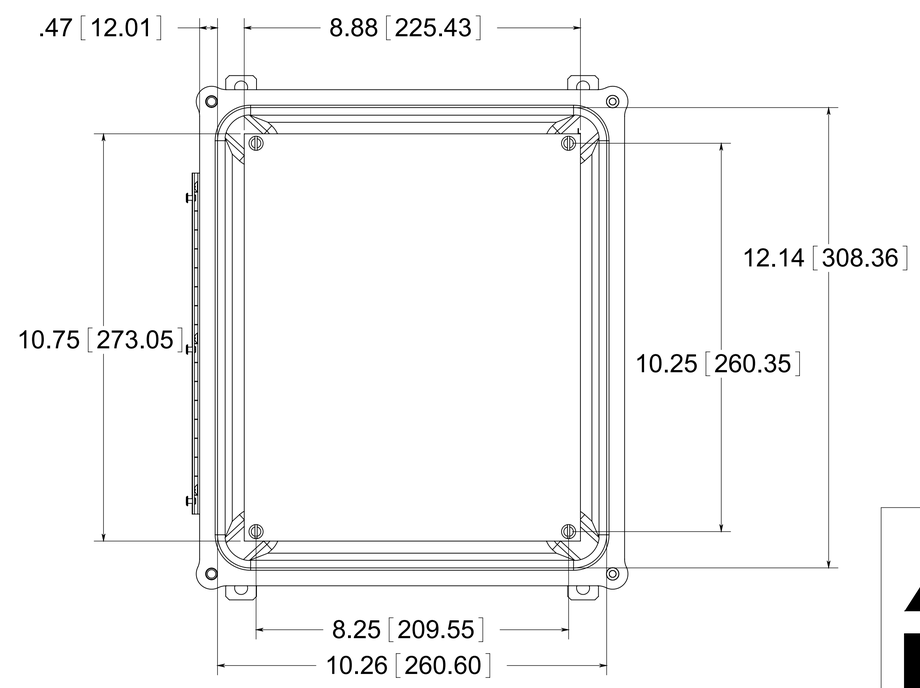

30.5mm HOLE DETAIL

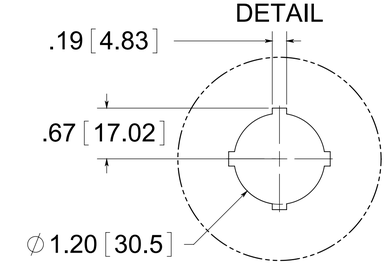

MATERIAL
BOX- COMPRESSION MOLDED FIBERGLASS REINFORCED POLYESTER
COVER- COMPRESSION MOLDED FIBERGLASS REINFORCED POLYESTER
WINDOWS- POLYCARBONATE

PART No. PJ12106HP16
for more information visit
www.hammfg.com
Data subject to change without notice

Drawing Not to Scale