THIS DRAWING IS UNPUBLISHED. RELEASED FOR PUBLICATION -,- .
© COPYRIGHT - BY TYCO ELECTRONICS CORPORATION. ALL RIGHTS RESERVED.

| LOC | DIST |
|---|---|
| — | — |

REVISIONS

| P | LTR | DESCRIPTION | DATE | DWN | APVD |
|---|---|---|---|---|---|
| | A1 | ECO-06-5985 | 14MAR06 | MB | MS |

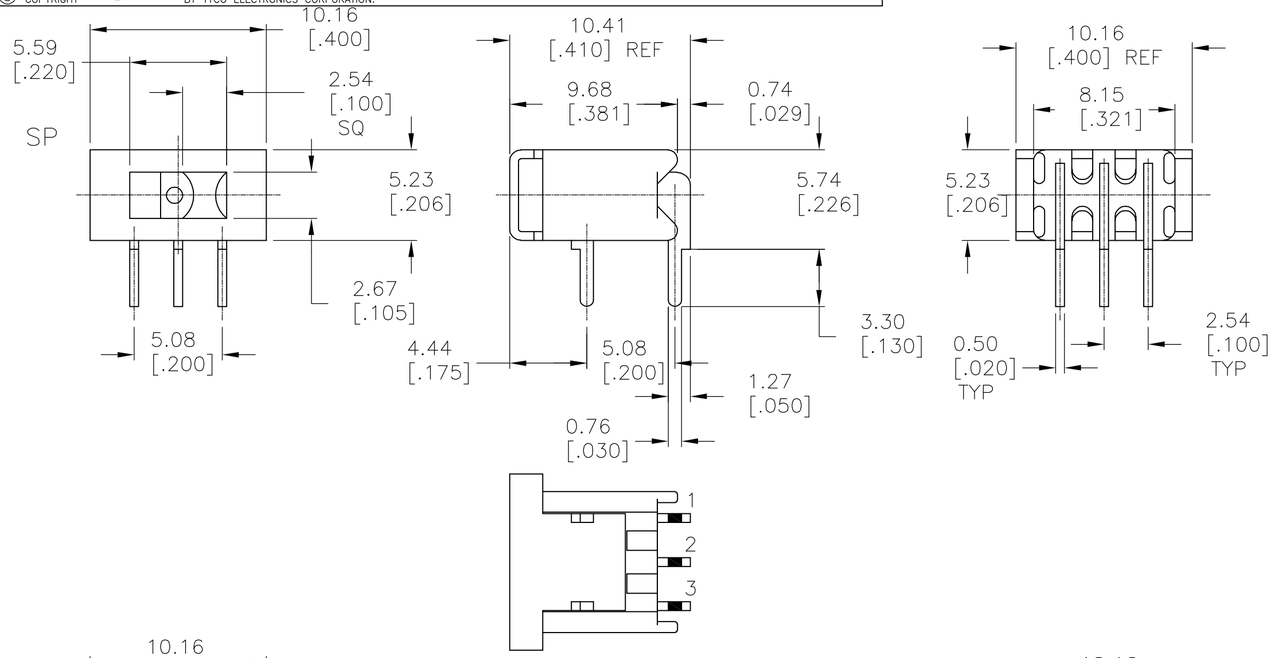


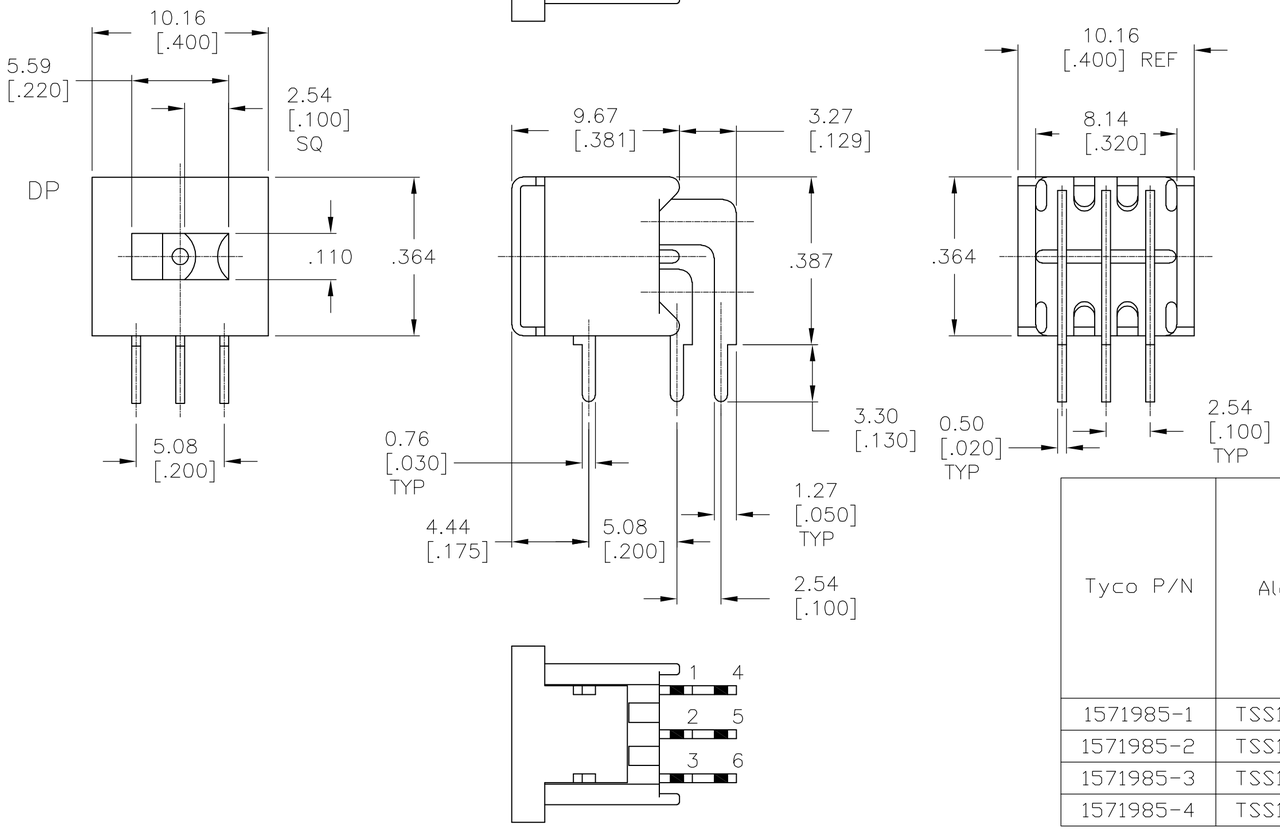


SPECIFICATIONS:
MATERIALS:
CASE–HIGH TEMPERATURE POLYESTER, BLACK
ACTUATOR–POLYESTER, UL94V–O, BLACK
FRAME– STEEL, TIN PLATE
MOVING CONTACT–COPPER ALLOY, GOLD OVER NICKEL PLATE
FIXED CONTACT–COPPER ALLOY, GOLD OVER NICKEL PLATE
TERMINAL–COPPER ALLOY, TIN OVER NICKEL PLATE

ELECTRICAL:
CURRENT RATING: 0.4 VA MAX. 20 V MAX. (AC/DC).
INITIAL CONTACT RESISTANCE: 40 MILLIOHMS MAX.
INSULATION RESISTANCE: OVER 1,000 MEGOHMS @ 500 VDC.
DIELECTRIC STRENGTH: 1,000 VAC RMS @ SEA LEVEL.
LIFE EXPECTANCY: 60,000–80,000 CYCLES

MECHANICAL:
ACTUATION FORCE 150–600 GRAMS

ENVIRONMENTAL:
OPERATING TEMPERATURE: –4°F TO +176°F(–20°C TO +80°C)
STORAGE TEMPERATURE: –4°F TO +176°F(–20°C TO +80°C)
SOLDER HEAT RESISTANCE PER EIA–364–56A, PROCEDURE 3, COND. B
SOLDERABILITY PER EID 364–52, CLASS 2 CATEGORY 1

1. ALL MATERIALS AND FINISHES SHALL COMPLY WITH EU DIRECTIVE 2002/95/EC OF 27JAN2003 (ROHS).

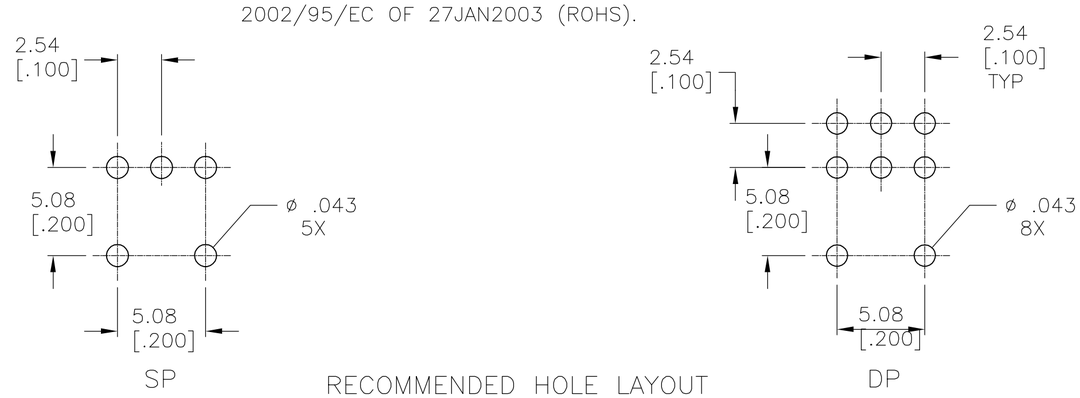


RECOMMENDED HOLE LAYOUT
LAYOUT TOLERANCES ±0.05[.002]

| Tyco P/N | Alco P/N | Actuator Flush/ Extended | Position | Type | 1 2 3 / 4 5 6 | 1 2 3 / 4 5 6 | 1 2 3 / 4 5 6 |
|---|---|---|---|---|---|---|---|
| 1571985-1 | TSS11DG1RA04 | Flush | 2 | SPDT | 1,2 | None | 2,3 |
| 1571985-2 | TSS11EG1RA04 | Flush | 3 | SPDT | 1,2 | Off | 2,3 |
| 1571985-3 | TSS11NG1RA04 | Flush | 2 | DPDT | 1-2, 4-5 | None | 2-3, 5-6 |
| 1571985-4 | TSS11PG1RA04 | Flush | 3 | DPDT | 1-2, 4-5 | Off | 2-3, 5-6 |

THIS DRAWING IS A CONTROLLED DOCUMENT.

DIMENSIONS: INCHES

TOLERANCES UNLESS OTHERWISE SPECIFIED:
0 PLC ± –
1 PLC ± –
2 PLC ± –
3 PLC ± 0.25[.010]
4 PLC ± –
ANGLES ± 1

MATERIAL: SEE SPECIFICATIONS
FINISH: –

DWN M.BINNER 2FEB06
CHK M.SARVER –
APVD M.SARVER –
PRODUCT SPEC —
APPLICATION SPEC —
WEIGHT —

tyco Electronics
Tyco Electronics Corporation
Harrisburg, PA 17105–3608

NAME
SLIDE SWITCH
TSS11DGRA & TSS11EGRA SP RA FLUSH SLIDER
—

| SIZE | CAGE CODE | DRAWING NO | RESTRICTED TO |
|---|---|---|---|
| A2 | 00779 | C-1571985 | — |

CUSTOMER DRAWING | SCALE 1:1 | SHEET 1 OF 1 | REV A1

1571985