84590

STRIP MATERIAL NUMBER	FINISH
84590-0023	OVERALL NICKEL 80μ" MINIMUM

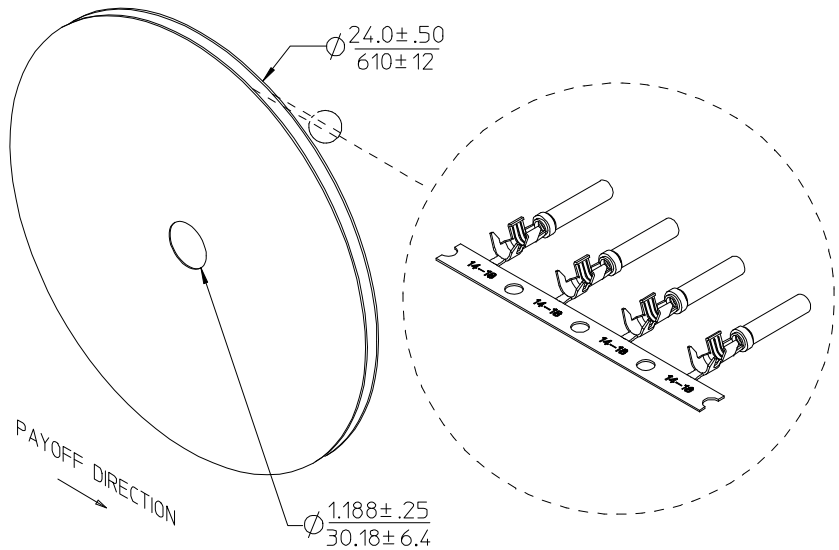

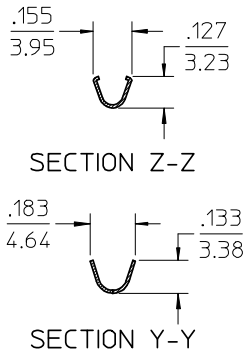

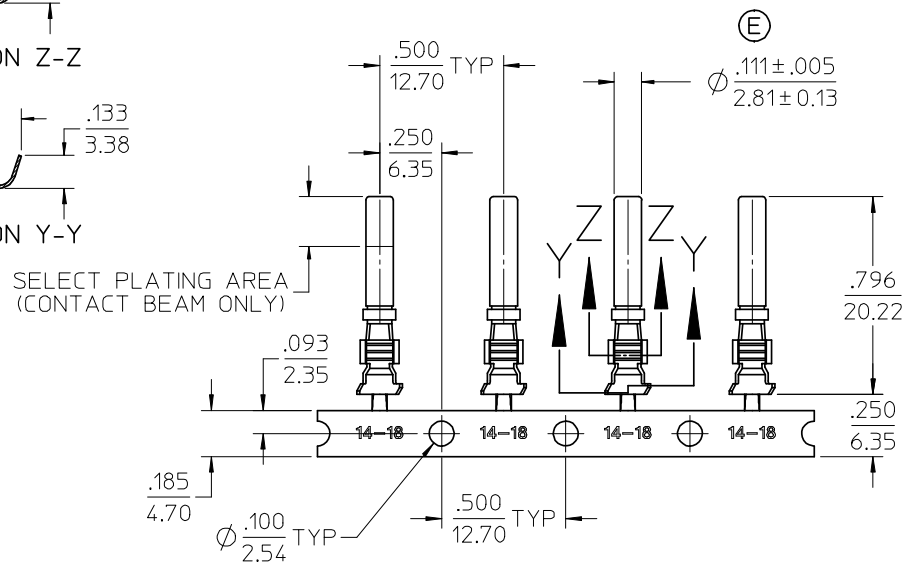

WIRE INSULATION O.D. RANGE .075-.150 / 1.91-3.81

NOTES:

1. TERMINAL MATERIAL: COPPER ALLOY .012/0.30 THICK. HOOD MATERIAL: STAINLESS STEEL .008/0.20 THICK.
2. FINISH: SEE CHART.
3. STRIP TERMINALS ARE REELED AS SHOWN ABOVE, 3000 PARTS PER REEL.
4. TERMINAL FOR USE WITH SERIES XRC CONNECTOR ASSEMBLIES.
5. ALL DIMENSIONS ARE REFERENCE.
6. ALL MATERIALS AND FINISHES ARE ROHS COMPLIANT.

UPDATE NOTES & TABLE			
EC NO: WNA2008-0139			
DRWN:WLEUNG	2008/02/26		
CHKD:RDEROSS	2008/04/21		
APPR:RDEROSS	2008/04/24		
E		DESCRIPTION	REV

QUALITY SYMBOLS: ▼=0, (C)=0

GENERAL TOLERANCES (UNLESS SPECIFIED)	mm	INCH
4 PLACES	± ---	± ---
3 PLACES	± ---	± .010
2 PLACES	± 0.25	± .02
1 PLACE	± 0.5	± ---
ANGULAR ± 1 °		

DRAFT WHERE APPLICABLE MUST REMAIN WITHIN DIMENSIONS

DIMENSION STYLE	SCALE	DESIGN UNITS	
IN/MM	2:1	INCH	THIRD ANGLE PROJECTION

DRAWN BY RSTONE	DATE 10/19/04	TITLE CONTACT SOCKET (HOODED), 14-18 AWG
CHECKED BY APLAZA	DATE 10/19/04	
APPROVED BY LROTHAUS	DATE 10/19/04	MOLEX INCORPORATED
MATERIAL NO. SEE CHART		DOCUMENT NO. SD-84590-004
		SHEET NO. 1 OF 1

SIZE B

THIS DRAWING CONTAINS INFORMATION THAT IS PROPRIETARY TO MOLEX INCORPORATED AND SHOULD NOT BE USED WITHOUT WRITTEN PERMISSION