THIS DRAWING IS UNPUBLISHED. RELEASED FOR PUBLICATION 20
© COPYRIGHT 20 BY TYCO ELECTRONICS CORPORATION. ALL RIGHTS RESERVED.

SET UP GAGE 458637-3

LOC	DIST
A	66

REVISIONS

P	LTR	DESCRIPTION	DATE	DWN	APVD
	A	SEE ECO-06-020405	29AUG2006	LJL	MC

PART NUMBER	REV	TERMINATOR	FEED TYPE	DESCRIPTION
1528689-1	A	LEADMAKER	MECH POST FEED	CUTS CARRIER
1528689-2	A	BENCH	MECH PRE FEED	CUTS CARRIER
1528689-6	A	LEADMAKER	MECH POST FEED	CONTINUOUS CARRIER
7-1528689-1	A	LEADMAKER	MECH POST FEED	-1 AND SPARE PARTS
7-1528689-2	A	BENCH	MECH PRE FEED	-2 AND SPARE PARTS
7-1528689-6	A	LEADMAKER	MECH POST FEED	-6 AND SPARE PARTS
7-1528689-7	A	-	-	SPARE PARTS KIT

CRIMP DATA TYCO TERMINAL TYCO CRIMP SPEC

TERMINAL NAME: DIA 2.5MM FOR CONTACT PIN/SOCKET

CRIMP	SIZE	TYPE	RANGE
WIRE	2.03 [.080 IN]	F	0.50mm²-1.00mm²
INSUL	2.54 [.100 IN]	O	1.40-2.10 [.055-.083 IN]

WIRE STRIP LENGTH REF TO SPEC

APPL INSTRUCTIONS 408-8322 & 408-8490

TERMINAL APPL SPEC 114-18020 (A) - 114-18040 (B) -

FEED 14.50 [.571 IN]

TERMINALS APPLIED

929963 (A)	-	-	-
929970 (A)	-	-	-
929986 (B)	-	-	-
-	-	-	-
-	-	-	-

WIRE SIZE	CRIMP HEIGHT *	REF SETTING *
1.00mm²	1.45 ±0.05 [.057 ±.002 IN]	B 9
0.75mm²	1.36 ±0.05 [.054 ±.002 IN]	C 5
0.50mm²	1.27 ±0.05 [.050 ±.002 IN]	D 2
-	-	-
-	-	-
-	-	-
-	-	-
-	-	-
-	-	-
-	-	-
-	-	-
-	-	-

1. RECOMMENDED SPARE PARTS.
2. GREASE RAM, CAM, CAM FOLLOWER AND FEED ROD LIGHTLY.
3. CERTAIN TERMINALS REQUIRE LUBRICATION. REFER TO THE APPLICATOR INSTRUCTION SHEET FOR MORE INFORMATION.
4. LUBRICATE DAILY PER THE APPLICATOR INSTRUCTION SHEET SUPPLIED WITH THE APPLICATOR.

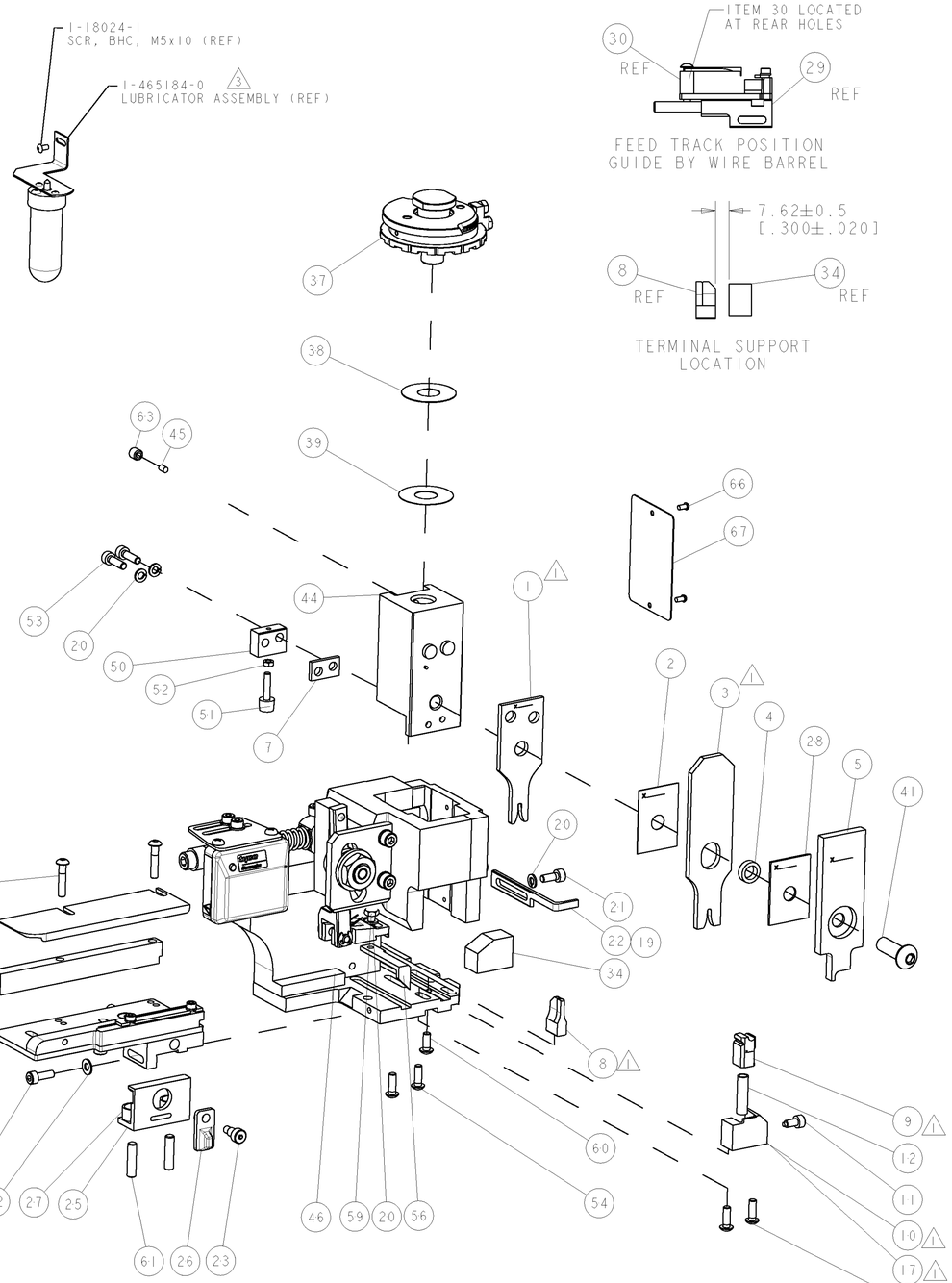

* WARNING
ON INSTALLATION, SET WIRE DISC TO LARGEST WIRE SIZE SETTING. USE OF SETTINGS BELOW MIN. REQUIRED CRIMP HEIGHT SETTING WILL CAUSE DAMAGE TO CRIMP TOOLING.

VIEW B ROTATED 180°

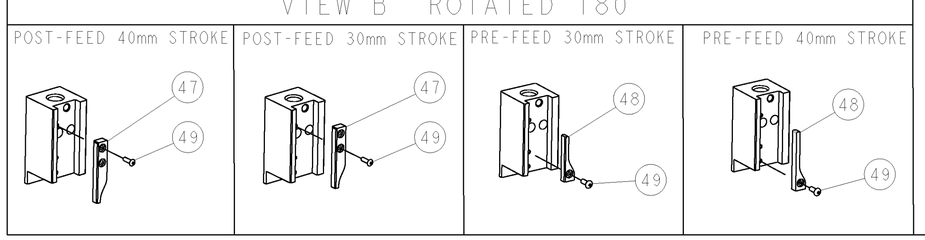

ITEM NO	DESCRIPTION	PART NO	-77	-76	-72	-71	-6	-2	-1
84	-	-	-	-	-	-	-	-	-
83	-	-	-	-	-	-	-	-	-
82	-	-	-	-	-	-	-	-	-
81	-	-	-	-	-	-	-	-	-
80	-	-	-	-	-	-	-	-	-
79	-	-	-	-	-	-	-	-	-
78	-	-	-	-	-	-	-	-	-
77	-	-	-	-	-	-	-	-	-
76	-	-	-	-	-	-	-	-	-
75	-	-	-	-	-	-	-	-	-
74	-	-	-	-	-	-	-	-	-
73	-	-	-	-	-	-	-	-	-
72	-	-	-	-	-	-	-	-	-
71	1338705-3	DOCUMENTATION PACKAGE	-	1	1	1	1	1	1
70	-	-	-	-	-	-	-	-	-
69	-	-	-	-	-	-	-	-	-
68	-	-	-	-	-	-	-	-	-
67	461264-5	PLATE, IDENTIFICATION	-	1	1	1	1	1	1
66	21017-2	SCREW, DRIVE	-	2	2	2	2	2	2
65	-	-	-	-	-	-	-	-	-
64	-	-	-	-	-	-	-	-	-
63	3-18031-0	SCR, SET, CUP POINT M6 X 6.0	-	1	1	1	1	1	1
62	-	-	-	-	-	-	-	-	-
61	2-18032-5	SCR, SET, FLT POINT M5 X 20.0	-	2	2	2	2	2	2
60	18024-7	SCR, BTN SKT HD CAP (M4 X 10.0)	-	1	1	1	1	1	1
59	5-18022-2	SCR, HEX HD CAP M4 X 8.0	-	1	1	1	1	1	1
58	-	-	-	-	-	-	-	-	-
57	-	-	-	-	-	-	-	-	-
56	1338685-1	PAWL, FEED	-	1	1	1	1	1	1
55	-	-	-	-	-	-	-	-	-
54	18024-8	SCR, BTN SKT HD CAP (M4 X 12.0)	-	4	4	4	4	4	4
53	9-18023-6	SCR, SKT HD CAP M4 X 14.0	-	2	2	2	2	2	2
52	18030-1	NUT, HEX, REG M3	-	1	1	1	1	1	1
51	811242-5	BUMPER, HOLD DOWN	-	1	1	1	1	1	1
50	690753-2	SPACER, TONKER	-	1	1	1	1	1	1
49	18024-3	SCR, BTN SKT HD CAP (M3 X 10.0)	-	1	1	1	1	1	1
48	1338675-1	CAM, UNIVERSAL PRE FEED	-	-	1	-	-	1	-
47	1338676-1	CAM, UNIVERSAL POST-FEED	-	1	1	-	1	1	-
46	1320999-3	APPLICATOR SUBASSEMBLY, HDI	-	1	1	1	1	1	1
45	690191-1	PLUG,NYLON	-	1	1	1	1	1	1
44	1338660-1	RAM	-	1	1	1	1	1	1
43	-	-	-	-	-	-	-	-	-
42	-	-	-	-	-	-	-	-	-
41	2-18024-6	SCR, BTN SKT HD CAP (M8 X 25.0)	-	1	1	1	1	1	1
40	-	-	-	-	-	-	-	-	-
39	690125-1	SHIM SUB-ASSY	-	1	1	1	1	1	1
38	1-469367-0	SHIM	-	1	1	1	1	1	1
37	879103-3	FINE ADJUST HEAD SUBASSY	-	1	1	1	1	1	1
36	-	-	-	-	-	-	-	-	-
35	-	-	-	-	-	-	-	-	-
34	1320934-4	SUPPORT, TERMINAL	-	1	1	1	1	1	1
33	1-18024-0	SCR, BTN SKT HD CAP (M4 X 20.0)	-	2	2	2	2	2	2
32	18027-2	WASHER, FLAT, REG M4	-	1	1	1	1	1	1
31	1-18023-2	SCR, SKT HD CAP M4 X 12.0	-	1	1	1	1	1	1
30	1320908-1	SPACER, STRIP GUIDE	-	1	1	1	1	1	1
29	1633073-1	STRIP GUIDE ASSEMBLY	-	1	1	1	1	1	1
28	1-455888-0	SPACER, CRIMPER	-	1	1	1	1	1	1
27	1-22284-0	SPRING, COMPRESSION	-	2	2	2	2	2	2
26	356835-1	LEVER, DRAG RELEASE	-	1	1	1	1	1	1
25	240792-1	DRAG, TERMINAL	-	1	1	1	1	1	1
24	1320928-1	PLATE, STRIP GUIDE	-	1	1	1	1	1	1
23	980371-4	SCR, SKT HD SHLDR 5.0 DIA X 6.0	-	1	1	1	1	1	1
22	690472-2	STRIPPER	-	1	-	1	1	-	1
21	1-18023-1	SCR, SKT HD CAP M4 X 10.0	-	1	1	1	1	1	1
20	18025-2	WASHER, SPRG LOCK, REG M4	-	4	4	4	4	4	4
19	690472-1	STRIPPER	-	-	1	-	-	1	-
18	-	-	-	-	-	-	-	-	-
17	1338684-1	HOLDER, SHEAR, NO-CUT	-	1	-	-	1	-	-
16	-	-	-	-	-	-	-	-	-
15	-	-	-	-	-	-	-	-	-
14	-	-	-	-	-	-	-	-	-
13	-	-	-	-	-	-	-	-	-
12	3-22280-3	SPRING, COMPRESSION	-	1	1	1	1	1	1
11	356885-4	STOP, SHEAR	-	1	1	1	1	1	1
10	1320921-1	SHEAR HOLDER, FRONT, CUT	-	-	1	1	-	1	1
9	462006-1	FLOATING SHEAR, FRONT	-	1	1	1	1	1	1
8	1-1333204-8	ANVIL, COMBINATION	1	2	2	2	1	1	1
7	240641-9	SPACER	-	1	1	1	1	1	1
6	-	-	-	-	-	-	-	-	-
5	2-455889-0	DEPRESSOR, SHEAR	-	1	1	1	1	1	1
4	3-238011-1	BLOCK, CRIMPER SPACER	-	1	1	1	1	1	1
3	2-655830-6	CRIMPER, INSUL O	1	2	2	2	1	1	1
2	455888-3	SPACER, CRIMPER	-	1	1	1	1	1	1
1	1-456405-6	CRIMPER, WIRE PREMIUM	1	2	2	2	1	1	1
ITEM NO	DESCRIPTION	PART NO	-77	-76	-72	-71	-6	-2	-1

THIS DRAWING IS A CONTROLLED DOCUMENT FOR TYCO ELECTRONICS CORPORATION. IT IS SUBJECT TO CHANGE AND THE CONTROLLING ENGINEERING ORGANIZATION SHOULD BE CONTACTED FOR THE LATEST REVISION.

DIMENSIONS: mm [IN]

TOLERANCES UNLESS OTHERWISE SPECIFIED:
0 PLC ±-
1 PLC ±-
2 PLC ±-
3 PLC ±-
4 PLC ±-
ANGLES ±-

MATERIAL - -
FINISH - -

DWN D. PROUSE 25JUL2006
CHK -
APVD M.CLIFFORD 25JUL2006
PRODUCT SPEC -
APPLICATION SPEC See Table
WEIGHT -

tyco Electronics
Tyco Electronics
Harrisburg, PA 17105-3608

NAME FINE ADJUST SIDE FEED HDI APPLICATOR

SIZE	CAGE CODE	DRAWING NO	RESTRICTED TO
A1	00779	C-1528689	-

CUSTOMER DRAWING SCALE 3:5 SHEET 1 OF 1 REV A

AMP 4805 REV 31MAR2000

Pro/ENGINEER DRAWING