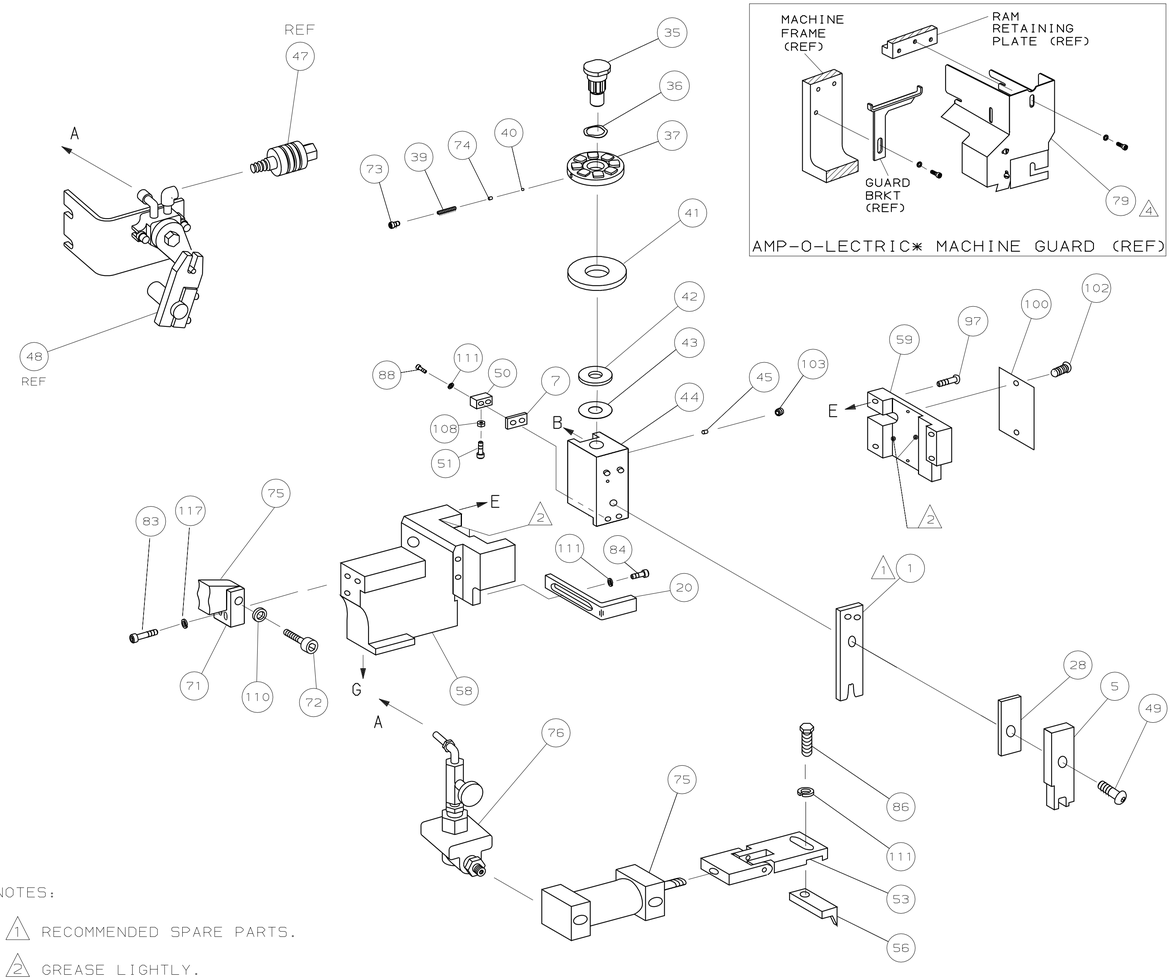

NOTES:

1. RECOMMENDED SPARE PARTS.
2. GREASE LIGHTLY.
3. LUBRICATE DAILY USING NO. 20 MACHINE OIL.
4. GUARD MUST BE IN PLACE WHEN OPERATING APPLICATOR IN AMP-O-ELECTRIC MACHINE.
5. SEE DRAWING FOR COMPONENTS

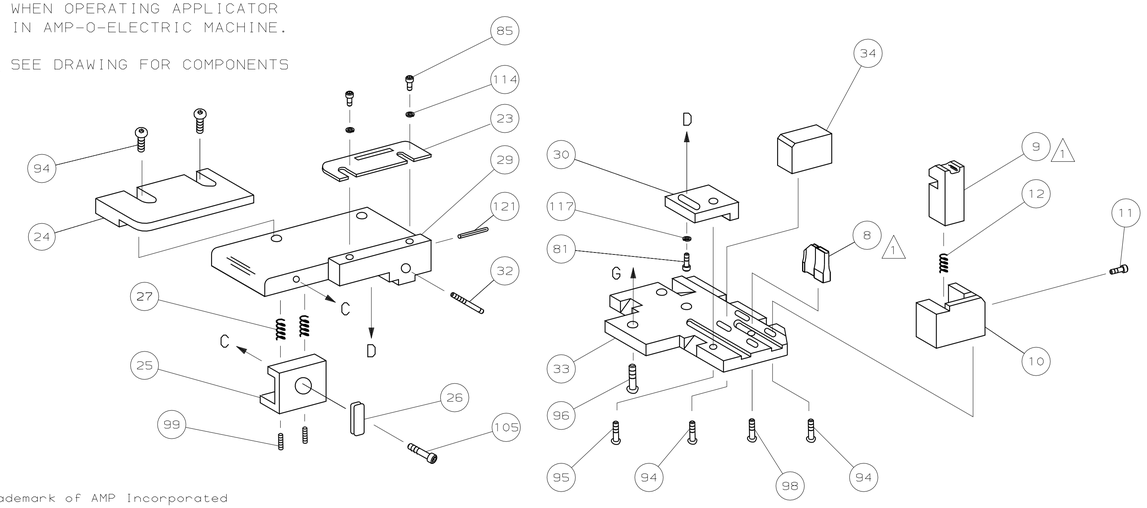

QTY	PART NO	DESCRIPTION	ITEM NO
			124
			123
			122
1	4-21028-0	PIN,SLT SPR(.093øx.75)ST GUIDE PL	121
			120
			119
			118
3	21024-5	WASHER,LOCK(NO.10)ADJ BLOCK	117
			116
			115
2	21024-2	WASHER,LOCK(NO.4)FRONT STRIP GUIDE	114
			113
			112
4	21024-4	WASHER,LOCK(NO.8)STRIPPER	111
1	21024-8	WASHER,LOCK(3/8) FEED ASSY	110
			109
1	21018-5	NUT, HEX (6-32)	108
			107
			106
1	22353-8	SCR,SHLD(.187øx.25)DRAG LEVER	105
			104
1	21009-2	SCR,SKT SET(1/4-20x.25LOC-WEL)RAM	103
2	21017-2	SCR,DRIVE(#2x.19)ID PLATE	102
			101
1	461264-1	PLATE, IDENTIFICATION	100
2	5-21006-6	SCR,SET(10-32X.75)DRAG	99
1	22733-8	SCR,BHC(8-32x.38LOC-WEL)ANVIL	98
4	2-21002-9	SCR,BHC(10-32X.75)CAP	97
3	2-22733-8	SCR,BHC(1/4-20x.62)HOUSING	96
1	2-21002-7	SCR,BHC(10-32x.50)SG ADJ BLOCK	95
6	2-21002-2	SCR,BHC(8-32x.50)SHEAR	94
2	3-21002-0	SCR, BHC(10-32x.88) DRAG	93
			92
			91
			90
			89
2	2-21000-8	SCR,SHC (8-32X .63)	88
2	2-21000-5	SCR,SKT CAP(8-32x.25)DEP-HOLD DOWN	87
1	2-22603-0	SCR,HEX HEAD(8-32x.31)FEED FINGER	86
2	1-21000-3	SCR,SKT CAP(4-40x.25)F STRIP GUIDE	85
1	2-21000-7	SCR,SKT CAP(8-32x.50)STRIPPER	84
2	3-21000-9	SCR,SKT CAP(10-32X1.00)FEED ASSY	83
			82
1	3-21000-4	SCR,SKT CAP(10-32x.38)SG ADJ BL	81
			80
1	462992-1	GUARD, ASSY △4	79
			78
			77
1	692655-5	VALVE ASSY △5	76
1	461065-1	AIR FEED ASSY △5	75
1	690603-1	SPRING, ASSIST	74
1	23030-1	SCR,SKT CAP(6-32x.25)CP DISC	73
1	3-21001-5	SCR,SHC(3/8x1.00)MT FEED BRKT	72
1	459610-3	MOUNT, FEED BRACKET	71
			70
			69
			68
			67
			66
			65
			64
			63
			62
			61
			60

QTY	PART NO	DESCRIPTION	ITEM NO
			59
			58
			57
1	454220-1	CAP, HOUSING	56
			55
			54
1	461062-2	FEED FINGER ASSY	53
			52
1	811242-2	BUMPER, HOLDER	51
1	690753-1	SPACER, TONKER	50
1	7-21002-9	BOLT, CRIMPER(5/16-24x1.00)	49
			48
REF	24042-2	VALVE, SHUT OFF	47
REF	692655-6	AIR FEED VALVE ASSY	46
1	690191-1	PLUG, NYLON	45
1	455673-1	RAM	44
1	690125-1	WASHER, LAMINATED	43
1	690124-1	WASHER, RAM	42
1	690223-1	DISC, SPACER	41
1	23241-6	BALL, STEEL	40
1	690170-1	SPRING, COMPRESSION	39
			38
1	9-455829-4	DISC, WIRE	37
1	22480-5	WASHER, SPRING	36
1	690212-1	POST, RAM	35
1	690786-3	SUPPORT, TERMINAL	34
1	455675-1	PLATE, BASE	33
1	690432-3	SCREW, ADJUSTMENT	32
			31
1	455689-1	BLOCK, STRIP GUIDE ADJ	30
1	458144-1	PLATE, STRIP GUIDE	29
1	1-455888-9	SPACER, FRONT SHEAR DEP	28
2	1-22284-0	SPRING, DRAG	27
1	356835-1	LEVER, DRAG RELEASE	26
1	240792-1	DRAG, STOCK	25
1	6-690504-1	GUIDE, STRIP (REAR)	24
1	690438-1	GUIDE, STRIP (FRONT)	23
			22
			21
			20
1	691353-1	STRIPPER	19
			18
			17
			16
			15
			14
			13
1	3-22280-3	SPRING, SHEAR	12
1	690461-7	STOP, SHEAR	11
1	1-690459-0	HOLDER, SHEAR (FRONT)	10
1	1-454276-6	SHEAR, FLOAT (FRONT) △1	9
1	3-683403-6	ANVIL △1	8
1	240641-5	SPACER, DEPRESSOR (REAR)	7
			6
1	2-455889-1	DEPRESSOR, SHEAR (FRONT)	5
			4
			3
			2
1	456412-9	CRIMPER, WIRE △1	1

CRIMPING DATA				APPLICATOR WILL APPLY
PAD LTR	CRIMP HEIGHT	WIRE SIZE	WIRE STRIP LENGTH	555928-1
A	.129	10	.203-.218	555928-2
B	NOT	USED		555485-1
C	.115	12		556136-1
D	NOT	USED		556880-2

CRIMP	SIZE	TYPE	FEED	APPL INST
WIRE	.180	F	.730	AI 8063
INSUL	–	–		

WIRE RANGE	INSULATION RANGE	MACHINE NO
12-10	–	565435-5

REMARKS

AMP-O-LECTRIC
AIR FEED

REMARKS	NO	REV
	TO APPLY TERMINAL SPEC 114-6034	
APPL USED ON MACHINE PART NO / MACH SERIAL NO	DISTRIBUTION	
CUSTOMER NAME / APPL SERIAL NO	ORIGINAL	
ADDRESS / PURCHASE ORDER	CUSTOMER COPY	
CITY / ENG APP	FIELD ENG COPY	

P	F	LTR	REVISION RECORD	APP	DATE
		U	ECR-06-026591	TE	11-06
		T1	ECN 0150-1527-04	TE	12-04
		T	ECN 0150-1416-02	TE	10-02
		S	ECN 0150-0150-00	TE	2-00
		R	0150-0058-00	TE	JAN00
		P	ECN 0150-9448-99	DS	7-99
		N	ECN 0150-9328-99	TE	5-99
		M	0150-8605-98	TB	6-98
		L	0150-7448-97	TB	1-97
		K	0150-6144-95	CE	5/95
		J	0150-6064-95	CE	4-95
		H	ECN 0150-5154-94	CE	1-94
		G	EC 0150-4859-93	TB	10-93
		F	EC 0150 4681 93	JB/CE	8-4-93
		E	ECN 0150-4542-93	TB	5-93
		D	ECN A-399692	TB	10-92
		C	EC A-359092	LK	4-91
		B	ECN A-324491	PM	2-91
		A	ECN A-263690	TB	9-90

SET UP GAGE 458637-1 | 10-1 1288
DR 5/2/90 P.MATHIAS | APP 5-4-90 B WOLFE
CHK 5-4-90 P MARTZ | REL 5-4-92 ENTERLINE

AMP — AMP INCORPORATED Harrisburg, Pa.

LOC A | D | NO 567256-4 | REV U

NAME MINIATURE QUICK CHANGE APPLICATOR SIDE FEED (CONTACT POWER CONN)

CAGE CODE 00779 — CUSTOMER AND ASSEMBLY DRAWING — RESTRICTED TO

DIST 66

* Trademark of AMP Incorporated

THIS DRAWING IS A CONTROLLED DOCUMENT.
RELEASED FOR PUBLICATION: JUN 24, 1998
© COPYRIGHT 1998 BY AMP INCORPORATED. ALL RIGHTS RESERVED.