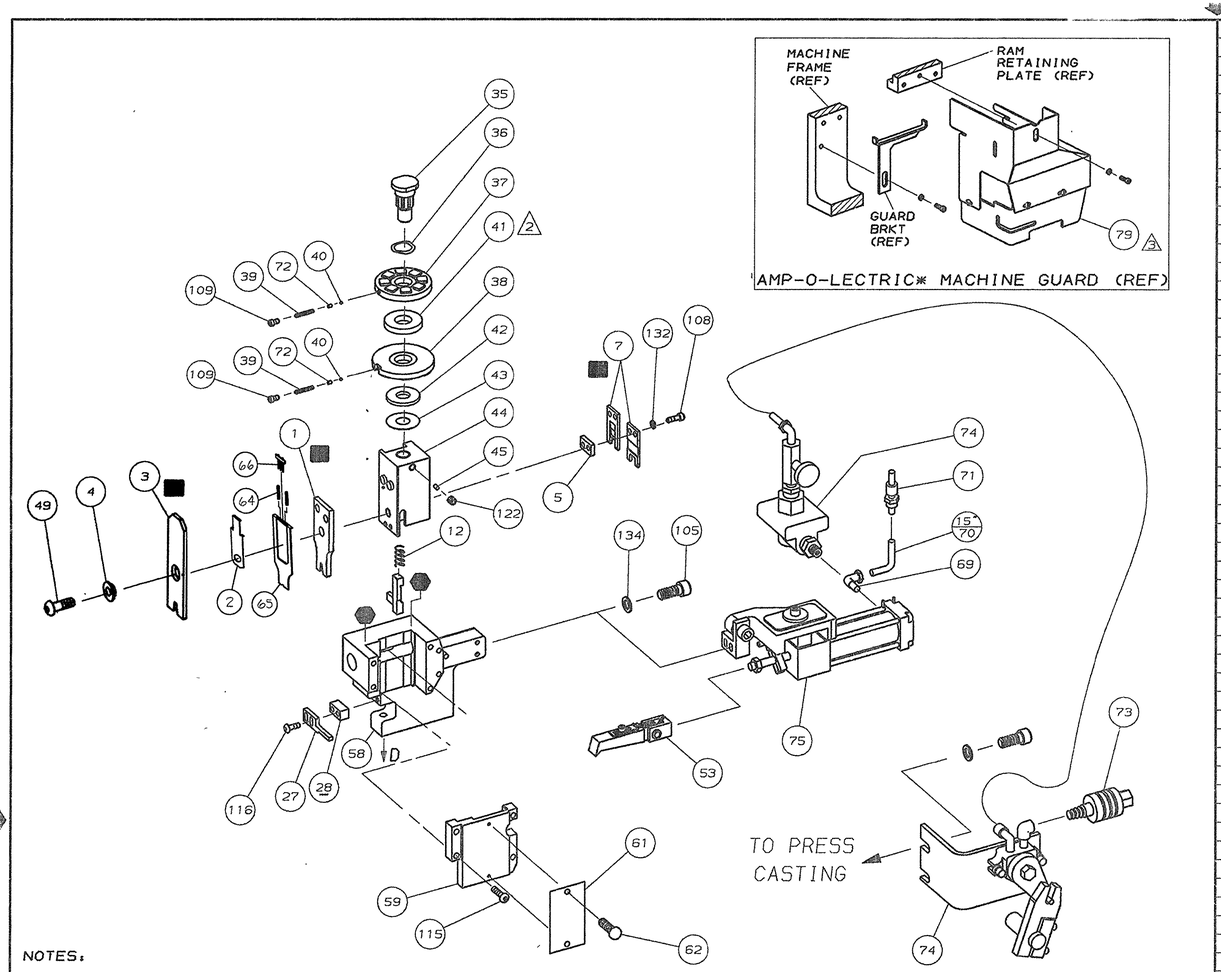

NOTES:

1. ONLY THE ITEMS WITH QUANTITIES SPECIFIED ON PARTS LIST ARE USED ON THIS APPLICATOR.

2. USED IN PLACE OF ITEM 38 WHEN INSULATION CRIMP IS NOT USED.

3. GUARD MUST BE IN PLACE WHEN OPERATING APPLICATOR IN AMP-O-LECTRIC MACHINE.

4. QUANTITY IN INCHES.

5. SEE DWGS FOR COMPONENTS.

KEY:

RECOMMENDED SPARE PARTS.

GREASE LIGHTLY.

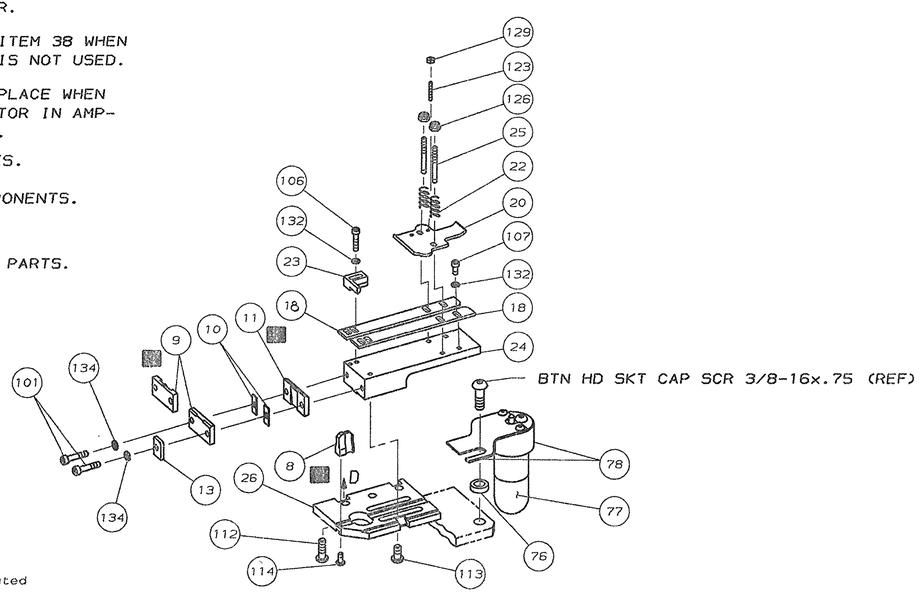

QTY	PART NO	DESCRIPTION	ITEM NO
			145
			144
			143
			142
			141
			140
			139
			138
1	21899-4	WASHER, FLAT (5/16 DIA) SCR ADJ	137
			136
			135
4	21024-5	WASHER, LOCK (# 10) SHEAR PLATES & FEED ASSY	134
			133
7	21024-4	WASHER, LOCK (# 8) STRIP GUIDE & BLADE	132
			131
			130
2	21018-4	NUT, HEX MACH (4-40) DRAG	129
			128
			127
2	21022-2	NUT, HEX SELF-LKG (8-32) DRAG STUD	126
			125
			124
2	2-21006-6	SCR, SKT SET OVAL POINT (4-40 x.62) DRAG	123
1	21009-2	SCR, SKT SET (1/4-20 x.25) (LOC-WEL) RAM	122
			121
			120
			119
			118
			117
2	2-21002-2	SCR, BTN HD SKT CAP (8-32 x.50) STRIPPER	116
4	2-21002-9	SCR, BTN HD SKT CAP (10-32 x.75) HSG CAP	115
1	22733-8	SCR, BTN HD SKT CAP (8-32x.38) (LOC-WEL) ANVIL	114
4	3-21002-3	SCR, BTN HD SKT CAP (1/4-20x.50) STR GDE PL	113
3	2-22733-8	SCR, BTN HD SKT CAP (1/4-20x.62) BASE PL	112
			111
			110
2	23030-1	SCR, SKT HD CAP (6-32x.25) (LOC-WEL) CP DISC	109
2	2-21000-6	SCR, SKT HD CAP (8-32x.38) SHEAR BLADE	108
3	2-21000-7	SCR, SKT HD CAP (8-32x.50) STRIP GUIDE	107
2	2-21000-9	SCR, SKT HD CAP (8-32x.75) STRIP GUIDE	106
2	3-21000-9	SCR, SKT HD CAP (10-32x1.00) AIR FEED ASSY	105
			104
			103
			102
2	3-21000-8	SCR, SKT HD CAP (10-32 x .88) SHEAR PLATE	101
1	455750-7	GUARD ASSY △3	79
1	465184-9	LUBRICATOR ASSY	78
REF	852931-2	OIL, LUBRICATING	77
1	454406-1	SPACER, LUB BRACKET	76
1	460277-1	AIR FEED ASS'Y △5	75
1	~~692655-1~~	AIR FEED VALVE ASSY- 692655-5 △5	74
1	~~24042-2~~	~~VALVE, SHUT OFF~~	73
2	690603-1	SPRING, ASSIST	72
—	23238-1	QUICK DISCONNECT	71
—	22620-1	TUBING, 1/4 OD △4	70
—	22294-6	ELBOW, 1/8 NPT - 1/4 TUBE	69
			68
			67
1	1424350-1	HOLDER, PIN, WIRED	66
1	1490525-3	DEPRESSOR, WIRE	65
	1-23147-4	SPRING, COMP	64
			63
2	21017-2	SCREW, DRIVE #2 x .19Lg	62
1	461264-1	PLATE, IDENTIFICATION	61
			60

QTY	PART NO	DESCRIPTION	ITEM NO
1	460680-1	FINGER, FEED ASS'Y △5	53
1	7-21002-9	BOLT, CRIMPER	49
1	690191-1	PLUG, NYLON	45
1	455674-1	RAM	44
1	690125-1	WASHER, LAMINATED	43
1	690124-1	WASHER, RAM	42
		SPACER, DISC △2	41
2	23241-6	BALL, STEEL	40
2	690170-1	SPRING, COMPRESSION	39
1	690142-1	DISC, INSULATION	38
1	6-690692-5	DISC, WIRE	37
1	22480-5	WASHER, SPRING	36
1	690212-1	POST, RAM	35
			29
			28
1	~~3-690471-2~~	~~SPACER, STRIPPER~~	28
1	690455-3	STRIPPER	27
1	455676-1	PLATE, BASE	26
2	22354-8	DRAG, STUD	25
1	455678-1	PLATE, STRIP GUIDE	24
1	240825-5	PLATE, STRIP HOLD	23
2	22281-9	SPRING, DRAG	22
1	462925-1	DRAG, STOCK	20
—		GUIDE, STRIP (REAR)	19
2	454204-5	GUIDE, STRIP (FRONT)	18
1	1-690481-4	SPACER, HOLD DOWN	13
1	23846-1	SPRING, HOLD DOWN	12
1	240644-1	PLATE, REAR SHEAR ■	11
—		SPACER, SHEAR PLATE	10
1	690482-4	PLATE, FRONT SHEAR ■	9
1	3-683452-9	ANVIL ■	8
1	3-690474-0	BLADE, SLUG ■	7
1	3-455892-3	HOLD DOWN, TERMINAL	6
1	4-240641-2	SPACER, SHEAR BLADE	5
1	238009-7	SPACER, TUBULAR	4
1	456134-1	CRIMPER, INSULATION ☐	3
1	1490524-1	SPACER, DEPRESSOR	2
1	456408-1	CRIMPER, WIRE ☐	1

CRIMPING DATA				APPLICATOR WILL APPLY
PAD LTR	CRIMP HEIGHT	WIRE SIZE	WIRE STRIP LENGTH	925688
A	.066	1.0 mm² (17)		
B	.063	.75 mm² (18)		
C	NOT	USED		
D	NOT	USED		

	CRIMP	SIZE	TYPE	FEED	APPL INST
	WIRE	.110	F	.760	A1 8040
	INSUL	.300	F		

WIRE RANGE	INSULATION RANGE	MACHINE NO
.75 - 1.0 mm²	7mm (.275 DIA)	565435-5

REMARKS
AMP-O-LECTRIC
AIR FEED

CUSTOMER WIRE REQUIRED FOR APPLICATOR SET-UP & QUALIFICATION

REMARKS	NO	REV
	TO APPLY TERMINAL	
APPL USED ON MACHINE PART NO / MACH SERIAL NO	DISTRIBUTION	
CUSTOMER NAME / APPL SERIAL NO	ORIGINAL	
ADDRESS / PURCHASE ORDER	CUSTOMER COPY	
CITY / ENG APP	FIELD ENG COPY	

P	F	LTR	REVISION RECORD	APP	DATE
		G	0150-1227-01	MA/TE	12-01
		F	0150-1134-01	MA/TE	11-01
		E	0150-9329-99		5/99
		D	0150-7328-96		10/96
		C1	REACT. 0150-7163-96		9/96
		C	ORS 0150-6782-96		4/96
		B	EC-A-272290		10-90
		A	ECN R 7330		1-28-87

SET UP CAGE 458638-1 10-1 12.87
DR 8-7-86 APP 8/86
CHK 8/86 REL 8/86
NAME MINIATURE QUICK CHANGE APPLICATOR END FEED (SPARK PLUG TERMINAL)

AMP INCORPORATED Harrisburg, Pa.

LOC A | D | NO 567238-2 | REV 6

CODE 00779 | CUSTOMER AND ASSEMBLY DRAWING | RESTRICTED TO

THIS IS A CONTROLLED DOCUMENT.
RECORDS GENERATED BY AMP INCORPORATED
REVISION/FORMATION 1.1
COPYRIGHT 1999 ALL RIGHTS RESERVED

DIST 66

* Trademark of AMP Incorporated