THIS DRAWING IS UNPUBLISHED. RELEASED FOR PUBLICATION - ,- .
© COPYRIGHT - By - ALL RIGHTS RESERVED.

LOC	DIST
CM	00

REVISIONS

P	LTR	DESCRIPTION	DATE	DWN	APVD
	G	REVISED PER ECO-12-007595	26JUL12	KH	SM

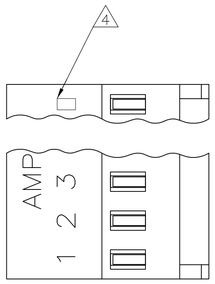

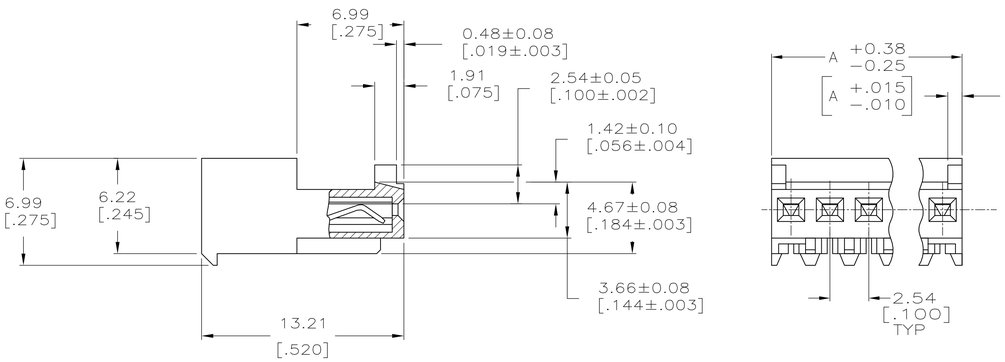

1. MATERIAL: CONNECTOR–NYLON UL94V–2.
   CONTACTS–0.30 [.012] THICK COPPER ALLOY
   0.00038 [.000015] GOLD OR 0.00038 [.000015]
   TOTAL GOLD FLASH OVER PALLADIUM NICKEL,
   PER TE CONNECTIVITY'S DISCRETION, IN CONTACT
   AREA WITH BRIGHT TIN–LEAD FOR 644040–2
   THRU 2–644040–8, MATTE WHISKER MITIGATED
   TIN FOR 3–644040–2 THRU 5–644040–8 OVER
   NICKEL UNDERPLATE.
2. CONTACTS ACCEPT 26 AWG WIRE WITH 1.52 [.060] MAX INSULATION DIAMETER.
3. CONTACTS MUST ACCEPT 0.64±0.03 [.025±.001] SQUARE POST AND REMAIN LOCKED IN POSITION.
4. IDENTIFICATION NUMBER FOR LAST CIRCUIT MAY NOT APPEAR ON ALL ASSEMBLIES.
5. DIMENSIONS IN BRACKETS ARE IN INCHES.
6. HOUSING FEATURES ARE: CLOSED END WITH LOCKING RAMP AND WITH POLARIZING TAB.
7. OBSOLETE PARTS: OBSOLETE CIS STREAMLINING PER D.RENAUD/D.SINISI
8. BLUE COLOR STRIPE ON HOUSING (NOT SHOWN) MAY RUN DOWN BETWEEN RIBS.

LEAD FREE

DIM A	NO.OF POSN	ASSEMBLY
35.56 [1.400]	14	4–644040–4
33.02 [1.300]	13	4–644040–3
30.48 [1.200]	12	4–644040–2
27.94 [1.100]	11	4–644040–1
25.40 [1.000]	10	4–644040–0
22.86 [.900]	9	3–644040–9
20.32 [.800]	8	3–644040–8
17.78 [.700]	7	3–644040–7
15.24 [.600]	6	3–644040–6
12.70 [.500]	5	3–644040–5
10.16 [.400]	4	3–644040–4
7.62 [.300]	3	3–644040–3
5.08 [.200]	2	3–644040–2

CONTAINS LEAD

DIM A	NO.OF POSN	ASSEMBLY
35.56 [1.400]	14	7 1–~~644040–4~~
33.02 [1.300]	13	1–644040–3
30.48 [1.200]	12	1–644040–2
27.94 [1.100]	11	1–644040–1
25.40 [1.000]	10	7 1–~~644040–0~~
22.86 [.900]	9	644040–9
20.32 [.800]	8	644040–8
17.78 [.700]	7	644040–7
15.24 [.600]	6	644040–6
12.70 [.500]	5	7 ~~644040–5~~
10.16 [.400]	4	7 ~~644040–4~~
7.62 [.300]	3	7 ~~644040–3~~
5.08 [.200]	2	644040–2

THIS DRAWING IS A CONTROLLED DOCUMENT.

DIMENSIONS: mm [INCHES]

TOLERANCES UNLESS OTHERWISE SPECIFIED:
0 PLC ±
1 PLC ±
2 PLC ± 0.13 [.005]
3 PLC ±
4 PLC ±
ANGLES ±

MATERIAL 1
FINISH 1

METRIC

DWN S. HOOVER 20-DEC-2004
CHK D. BOSSI 20-DEC-2004
APVD D. BOSSI 20-DEC-2004
PRODUCT SPEC 108-1050
APPLICATION SPEC 114-1019
WEIGHT

TE Connectivity

NAME MTA .100 CONNECTOR ASSEMBLY 26 AWG, STANDARD

SIZE	CAGE CODE	DRAWING NO	RESTRICTED TO
A1	00779	C-644040	

CUSTOMER DRAWING SCALE 5:1 SHEET 1 OF 1 REV G

4805 (3/11)