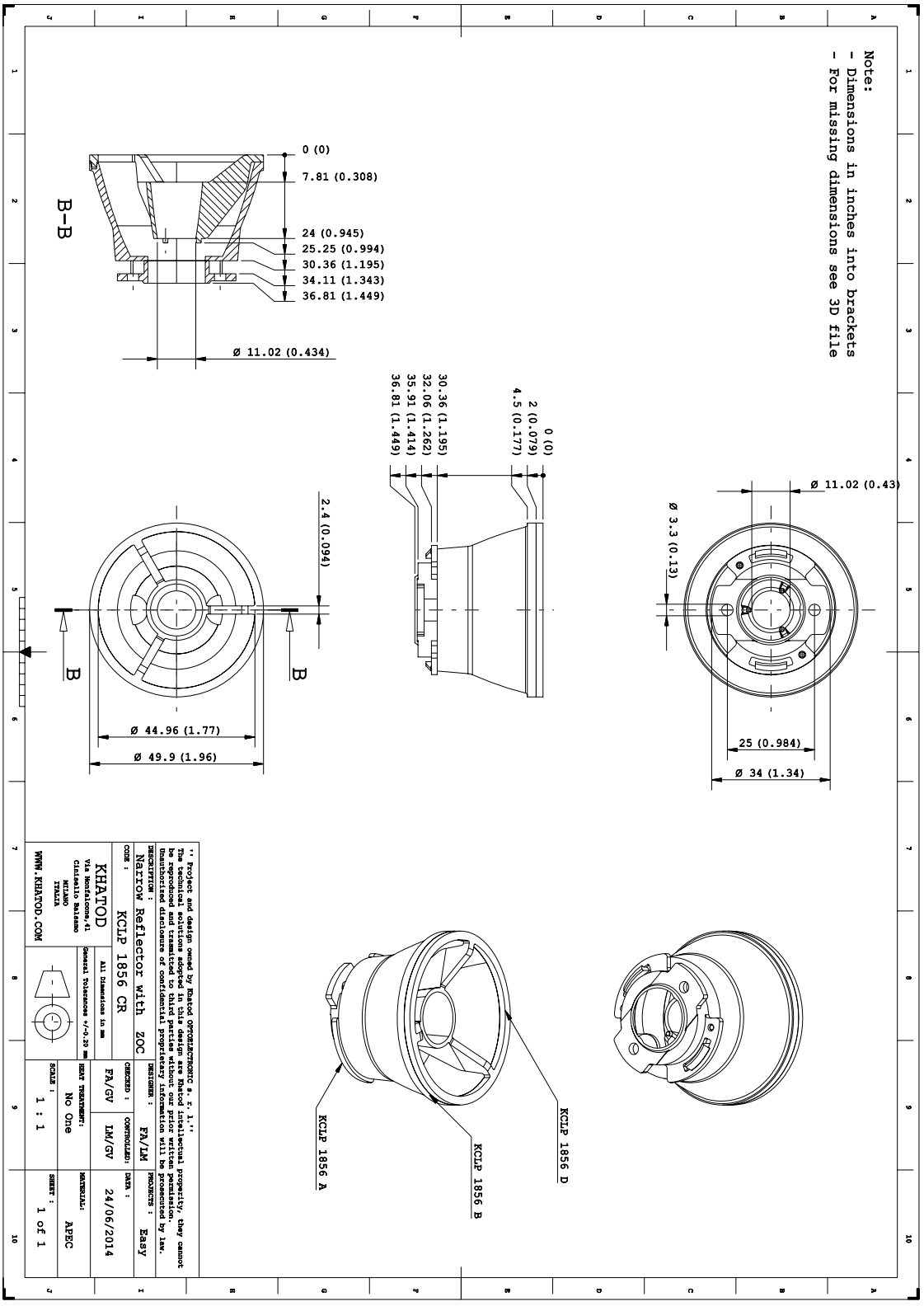
Note:
- Dimensions in inches into brackets
- For missing dimensions see 3D file
B-B
0 (0)
7.81 (0.308)
24 (0.945)
25.25 (0.994)
30.36 (1.195)
34.11 (1.343)
36.81 (1.449)
Ø 11.02 (0.434)
30.36 (1.195)
32.06 (1.262)
35.91 (1.414)
36.81 (1.449)
0 (0)
2 (0.079)
4.5 (0.177)
2.4 (0.094)
B
B
Ø 44.96 (1.77)
Ø 49.9 (1.96)
Ø 11.02 (0.43)
Ø 3.3 (0.13)
25 (0.984)
Ø 34 (1.34)
KCLP 1856 D
KCLP 1856 B
KCLP 1856 A
'' Project and design owned by Khatod OPTOELECTRONIC s. r. l.''
The technical solutions adopted in this design are Khatod intellectual property, they cannot
be reproduced and transmitted to third parties without our prior written permission.
Unauthorized disclosure of confidential proprietary information will be prosecuted by law.
DESCRIPTION : Narrow Reflector with ZOC
CODE : KCLP 1856 CR
All Dimensions in mm
General Tolerances +/-0.20 mm
DESIGNER : FA/LM
CHECKED : FA/GV
CONTROLLED: LM/GV
PROJECT : Easy
DATE : 24/06/2014
HEAT TREATMENT: No One
MATERIAL: APEC
SCALE : 1 : 1
SHEET : 1 of 1
KHATOD
Via Montalcone,41
Cinisello Balsamo
MILANO
ITALIA
WWW.KHATOD.COM