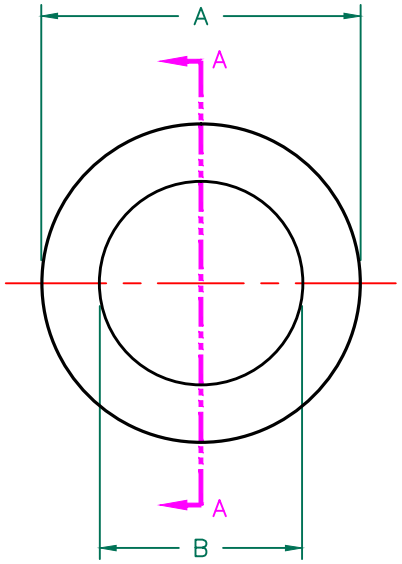

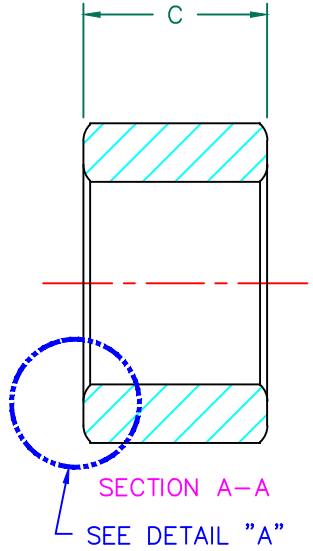

SCALE DRAWING 1:1

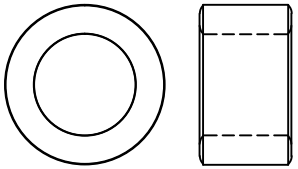

LFB220140–000

RoHS

IMPEDANCE (Z) NET SEE NOTE 1

FREQUENCY	500 KHz	1 MHz	5 MHz
NOMINAL (REF.) 1 TURN	18 Ω	30 Ω	28 Ω
MINIMUM (SPEC.) 1 TURN	– Ω	24 Ω	– Ω
NOMINAL (REF.) 2 TURNS	72 Ω	120 Ω	110 Ω
NOMINAL (REF.) 3 TURNS	163 Ω	270 Ω	250 Ω

TEST CRITERIA

METER	HP4396A OR EQUIVALENT
FIXTURE	HP16092A OR EQUIVALENT

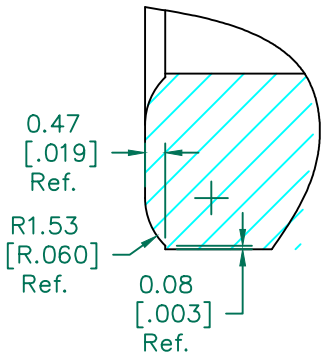

DETAIL "A"
CHAMFER
SCALE=6:1

Z vs. FREQUENCY
1 TURN, 2, AND 3 TURNS
(REF. ONLY)

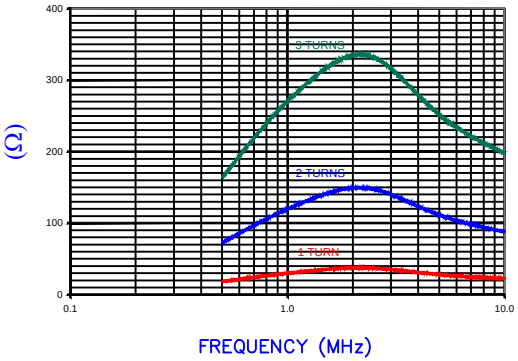

AGILENT E4991A RF Impedance/Material Analyzer
HP 16092A Test Fixture REF2694

NOTES: UNLESS OTHERWISE SPECIFIED

1. NET IMPEDANCE IS IMPEDANCE OF THE FERRITE CORE ONLY. ALL IMPEDANCE CONTRIBUTION FROM TEST WIRE AND FIXTURES HAS BEEN REMOVED.
2. COSMETIC SPECIFICATION REFER TO WI–QA–038.

FERRITE CORE DIMENSIONS (SPEC):

A	22.10 [.870]	±	0.55 [.022]
B	14.00 [.551]	±	0.55 [.022]
C	12.70 [.500]	±	0.40 [.016]

WEIGHT/1000 13.77 kgs [30.36 Lbs]

DIMENSIONS ARE IN mm [INCHES].

REV	DESCRIPTION	DATE	INT
E	UPDATE TOLERANCE AND DETAIL A	06/12/17	QIU
D	UPDATE COMPANY LOGO	07/13/08	TMB
C	CHG IMPEDANCE SPEC REMOVE MINIMUM SPEC AT 500KHz&5MHz	02/10/06	JRK
B	REVISE TOLERANCES ADD TEST REF #	12/28/04	JRK
A	ORIGINAL DRAFT	10/01/02	TMB

This print is the property of Laird Tech. and is loaned in confidence subject to return upon request and with the understanding that no copies shall be made without the written consent of Laird Tech. All rights to design or invention are reserved.

Laird

PROJECT/PART NUMBER:	REV	PART TYPE:	DRAWN BY:
LFB220140–000	E	FERRITE CORE	TMB

DATE:	SCALE:	MATERIAL:
10/01/02	2:1	LF

CAD #	TOOL #
LFB220140–000–E	B0870