THIS DRAWING IS UNPUBLISHED. RELEASED FOR PUBLICATION -,- .
© COPYRIGHT - BY TYCO ELECTRONICS CORPORATION. ALL RIGHTS RESERVED.

LOC	DIST
H	—

REVISIONS

P	LTR	DESCRIPTION	DATE	DWN	APVD
	A	-	-	—	—
	B	-	-	-	-
	C	ECR-07-011431	05-06-07	BSV	MKO

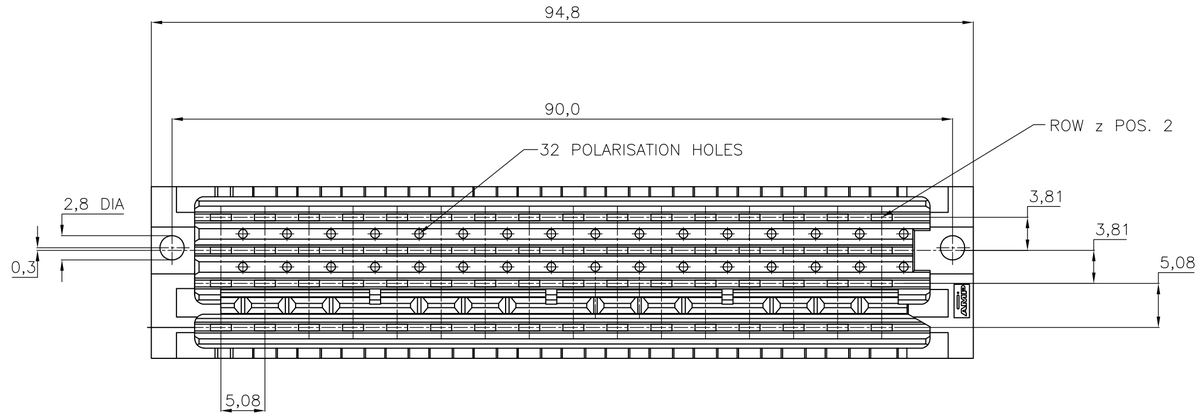

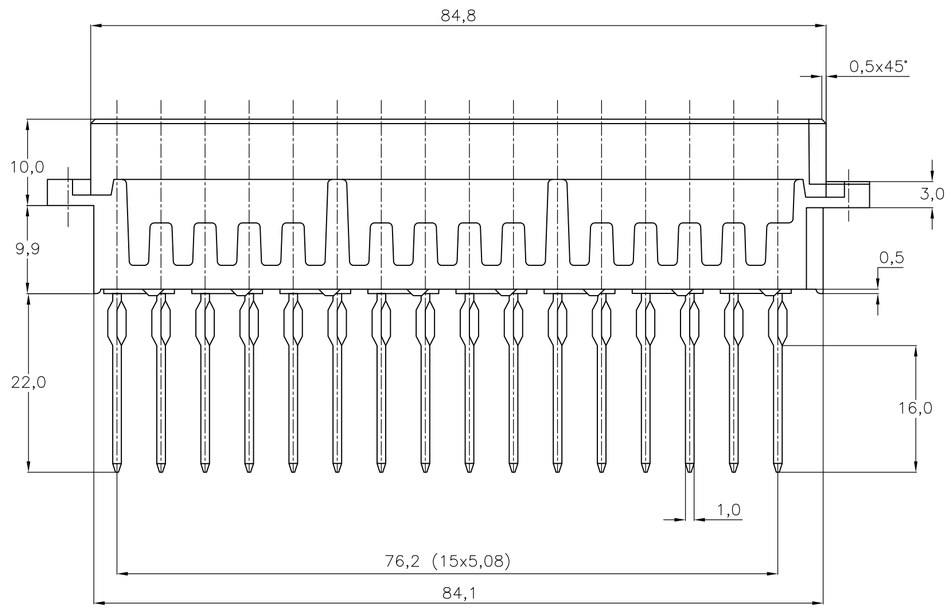

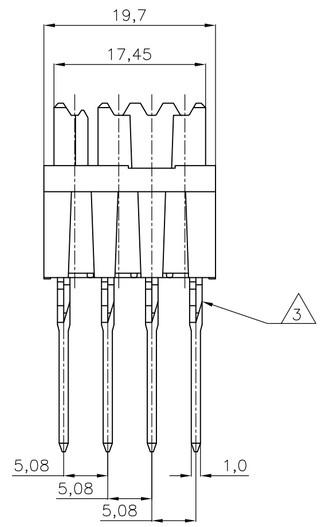

NOTES:

1. MATERIAL:
   - HOUSING: G.F. THERMOPL. POLYESTER 94-V0
     COLOUR : GREY
   - CONTACTS: PHOSPHORBRONZE
2. PLATING CONTACT :
   - 1 : 1,25 µm Au OVER 1,25 µm Ni AT CONTACT AREA,
     REMAINDER 2,0µm Sn OVER 1,25 µm Ni
   - 4 : SAME AS -1 ONLY 0,8µ Au AT CONTACT AREA
   - 7 : SAME AS -1 ONLY 2,0µ Au AT CONTACT AREA
   - 8 : SAME AS -1 ONLY 0,2µ Au AT CONTACT AREA
3. FOR PCB THICKNESS 2,4-3, 2.

P.C.B. HOLE DIM. ACTION PIN	
DRILLED HOLE	:1,75 ±1,25 mm
FIN. HOLE	:1,54 to 1,69 mm
AFTER REFLOW	:1,51 to 1,69 mm
Cu-thks	:0,025 to 0,075 mm
Sn-thks	:0,004 to 0,010 mm

P.O.S.	ROW z	ROW b	ROW d	ROW f
32	X	X	X	X
30	X	X	X	X
28	X	X	X	X
26	X	X	X	X
24	X	X	X	X
22	X	X	X	X
20	X	X	X	X
18	X	X	X	X
16	X	X	X	X
14	X	X	X	X
12	X	X	X	X
10	X	X	X	X
8	X	X	X	X
6	X	X	X	X
4	X	X	X	X
2	X	X	X	X

AN ASTERISK ,,X'' DENOTES A CONTACT.

	FINISH	MATERIAL	PARTNUMBER
OBSOLETE	SEE NOTE 2	SEE NOTE 1	~~167771-8~~
			167771-7
OBSOLETE			~~167771-4~~
			167771-1

THIS DRAWING IS A CONTROLLED DOCUMENT.

DIMENSIONS: mm

TOLERANCES UNLESS OTHERWISE SPECIFIED:
0 PLC ± -
1 PLC ± -
2 PLC ± -
3 PLC ± -
4 PLC ± -
ANGLES ± -

MATERIAL -
FINISH -

DWN J.v.LIEMPT 29JAN91
CHK J.v.GRUNSVEN 04FEB91
APVD L.v.SOEST 04FEB91
PRODUCT SPEC —
APPLICATION SPEC —
WEIGHT —

Tyco Electronics
Tyco Electronics Corporation
's-Hertogenbosch, Nederland

NAME
4x16 POS. TYPE G FEMALE WITH ACTION-PIN CONNECTOR PER DIN 41612

SIZE	CAGE CODE	DRAWING NO	RESTRICTED TO
A2	00779	C-167771	—

CUSTOMER DRAWING | SCALE NTS | SHEET 1 OF 1 | REV C