| PART NUMBER | REV | FIRST USED | TERMINATOR | FEED TYPE | DESCRIPTION |
|---|---|---|---|---|---|
| 1528520 – 1 | C | – | LEADMAKER | MECH POST FEED | CUTS CARRIER |
| 1528520 – 2 | C | – | BENCH | MECH PRE FEED | CUTS CARRIER |
| 1528520 – 6 | C | – | LEADMAKER | MECH POST FEED | CONTINUOUS CARRIER |
| 7 – 1528520 – 1 | C | – | LEADMAKER | MECH POST FEED | – 1 AND SPARE PARTS |
| 7 – 1528520 – 2 | C | – | BENCH | MECH PRE FEED | – 2 AND SPARE PARTS |
| 7 – 1528520 – 6 | C | – | LEADMAKER | MECH POST FEED | – 6 AND SPARE PARTS |
| 7 – 1528520 – 7 | A | – | – | – | SPARE PARTS KIT |

DWG NO 1528520

DIMENSIONING AND TOLERANCING PER ASME Y14.5M (ISO STANDARDS) THIS DRAWING IS A CONTROLLED DOCUMENT.

## CRIMP DATA FCI TERMINAL FCI CRIMP SPECS (4)

TERMINAL NAME: 2.8MM APEX TERMINAL FEMALE

| CRIMP | SIZE | TYPE | RANGE |
|---|---|---|---|
| WIRE | 2.36 [.093 IN] | F | 1.50mm² – 2.50mm² |
| INSUL | 3.05 [.120 IN] | 0 | 2.41–2.77 [.095–.109 IN] |

WIRE STRIP LENGTH 4.80–5.60 [.189–.220 IN]

APPL INSTRUCTION 408–8322 & 408–8490

TERMINAL APPL SPEC FCI TEST DOC. NONE –

FEED 15.20 [.598 IN]

### TERMINALS APPLIED

| AMP TERM PN | MFR TERM PN | – | – | – |
|---|---|---|---|---|
| 1572825–1 | 5400 1400 | – | – | – |
| – | – | – | – | – |
| – | – | – | – | – |
| – | – | – | – | – |
| – | – | – | – | – |
| – | – | – | – | – |
| – | – | – | – | – |

| WIRE SIZE mm² AWG | CRIMP HEIGHT * | REF SETTING |
|---|---|---|
| 2.50mm² | 1.90 ±0.05 [.075 ±.002 IN] | A 6 |
| 1.50mm² | 1.50 ±0.05 [.059 ±.002 IN] | D 4 |
| – | – | – |
| – | – | – |
| – | – | – |
| – | – | – |
| – | – | – |
| – | – | – |
| – | – | – |
| – | – | – |
| – | – | – |
| – | – | – |
| – | – | – |
| – | – | – |
| – | – | – |

| SET UP GAGE | LAYOUT |
|---|---|
| 458637–3 | L1528519 |

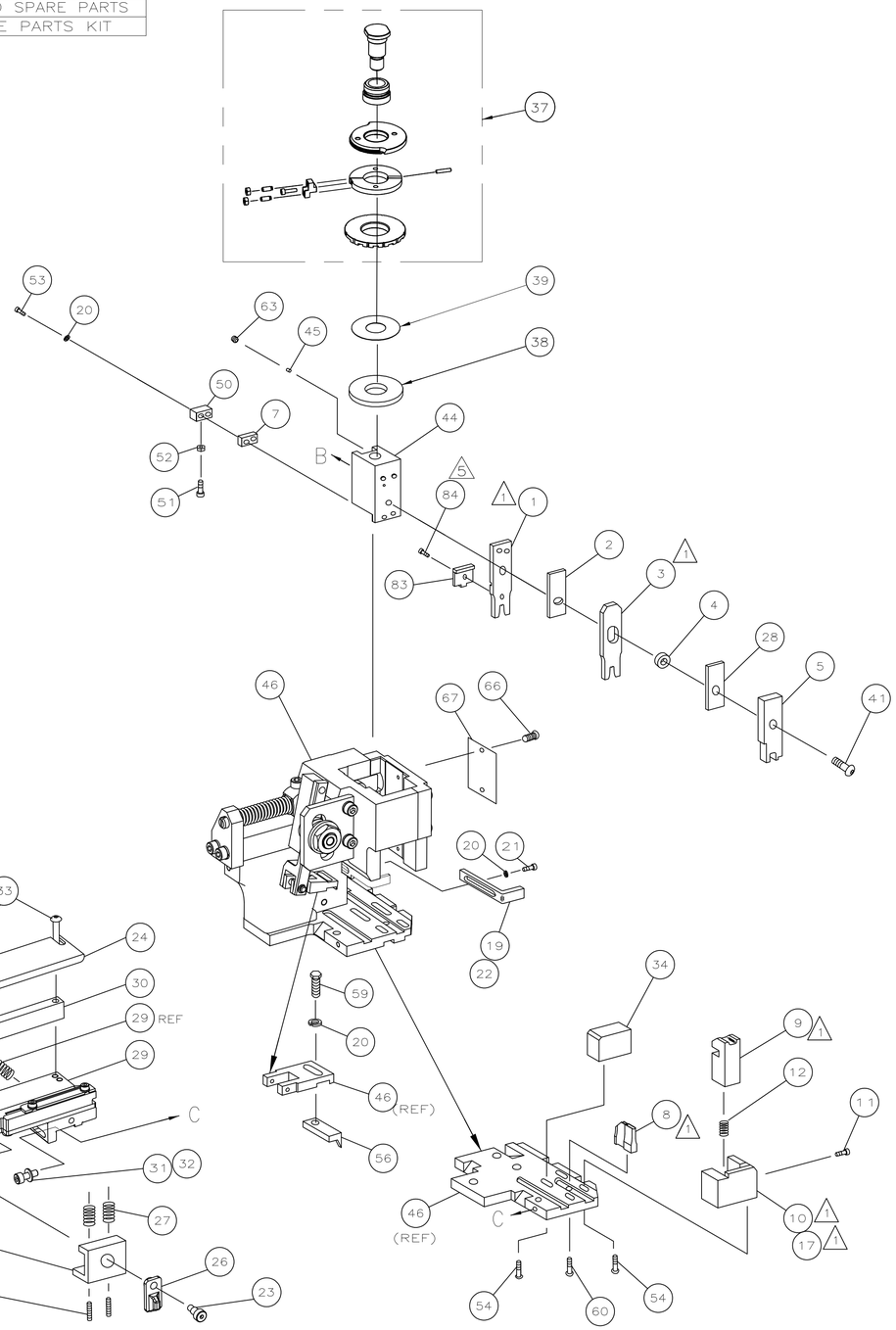


| | | | | | | | | | |
|---|---|---|---|---|---|---|---|---|---|
| (5) | – | 1 | 1 | 1 | 1 | 1 | 1 | 985575–1 | SCR,FHC (M3X6) DEPRESSOR | 84 |
| | – | 1 | 1 | 1 | 1 | 1 | 1 | 224405–4 | DEPRESSOR, WIRE, SPECIAL | 83 |
| | – | 1 | 1 | 1 | 1 | 1 | 1 | 1528520 | PRINT, APPLICATOR LOG SHEET | 72 |
| | – | 1 | 1 | 1 | 1 | 1 | 1 | 1338705–3 | DOCUMENTATION PACKAGE | 71 |
| | | | | | | | | | | 69 |
| | | | | | | | | | | 68 |
| | – | 1 | 1 | 1 | 1 | 1 | 1 | 461264–5 | PLATE, IDENTIFICATION | 67 |
| | – | 2 | 2 | 2 | 2 | 2 | 2 | 21017–2 | SCR,DRIVE(#2x.19)ID PLATE | 66 |
| | | | | | | | | | | 65 |
| | | | | | | | | | | 64 |
| | – | 1 | 1 | 1 | 1 | 1 | 1 | 3–18031–0 | SCR,SKT SET(M6X6)RAM | 63 |
| | | | | | | | | | | 62 |
| | – | 2 | 2 | 2 | 2 | 2 | 2 | 2–18032–5 | SCR,SKT SET (M5X20)DRAG | 61 |
| | – | 1 | 1 | 1 | 1 | 1 | 1 | 18024–7 | SCR,BHC(M4X10)ANVIL | 60 |
| | – | 1 | 1 | 1 | 1 | 1 | 1 | 5–18022–2 | SCR,HEX(M4X8)FEED FINGER | 59 |
| | | | | | | | | | | 58 |
| | | | | | | | | | | 57 |
| | – | 1 | 1 | 1 | 1 | 1 | 1 | 1338685–1 | PAWL, FEED | 56 |
| | | | | | | | | | | 55 |
| | – | 4 | 4 | 4 | 4 | 4 | 4 | 18024–8 | SCR,BHC(M4x12)SHEAR HOLDER | 54 |
| | – | 2 | 2 | 2 | 2 | 2 | 2 | 9–18023–6 | SCR,SHC(M4x14)TERM HLD DWN | 53 |
| | – | 1 | 1 | 1 | 1 | 1 | 1 | 18030–1 | NUT,HEX(M3)HOLD DOWN | 52 |
| | – | 1 | 1 | 1 | 1 | 1 | 1 | 811242–5 | BUMPER, HOLDDOWN | 51 |
| | – | 1 | 1 | 1 | 1 | 1 | 1 | 690753–2 | SPACER, TONKER | 50 |
| | – | 1 | 1 | 1 | 1 | 1 | 1 | 18024–3 | SCR,BHC(M3X10)CAM | 49 |
| | – | – | 1 | – | – | 1 | – | 1338675–1 | CAM, PRE FEED 30 & 40 mm ST | 48 |
| | – | 1 | – | 1 | 1 | – | 1 | 1338676–1 | CAM, POST FEED 30 & 40 mm ST | 47 |
| | – | 1 | 1 | 1 | 1 | 1 | 1 | 1320999–3 | APPLICATOR BASIC SUBASSY | 46 |
| | – | 1 | 1 | 1 | 1 | 1 | 1 | 690191–1 | PLUG, NYLON | 45 |
| | – | 1 | 1 | 1 | 1 | 1 | 1 | 1338660–1 | RAM | 44 |
| | | | | | | | | | | 43 |
| | | | | | | | | | | 42 |
| | – | 1 | 1 | 1 | 1 | 1 | 1 | 2–18024–6 | SCR,BHC(M8X25)RAM | 41 |
| | | | | | | | | | | 40 |
| | – | 1 | 1 | 1 | 1 | 1 | 1 | 690125–1 | SHIM SUBASSY | 39 |
| | – | 1 | 1 | 1 | 1 | 1 | 1 | 469367–2 | SPACER, FINE ADJUST | 38 |
| | – | 1 | 1 | 1 | 1 | 1 | 1 | 879103–2 | FINE ADJUST HEAD SUBASSY | 37 |
| | | | | | | | | | | 36 |
| | | | | | | | | | | 35 |
| | – | 1 | 1 | 1 | 1 | 1 | 1 | 1320934–6 | SUPPORT, TERMINAL | 34 |
| | – | 2 | 2 | 2 | 2 | 2 | 2 | 1–18024–0 | SCR,BHC(M4X20)STRIP GUIDE | 33 |
| | – | 1 | 1 | 1 | 1 | 1 | 1 | 18027–2 | WASHER, FLAT(M4) | 32 |
| | – | 1 | 1 | 1 | 1 | 1 | 1 | 1–18023–2 | SCR,SKT CAP(M4X12)MOUNT BLOCK | 31 |
| | – | 1 | 1 | 1 | 1 | 1 | 1 | 1320908–2 | SPACER, STRIP GUIDE | 30 |
| | – | 1 | 1 | 1 | 1 | 1 | 1 | 1633073–4 | STRIP GUIDE PLATE ASSY | 29 |
| | – | 1 | 1 | 1 | 1 | 1 | 1 | 455888–4 | SPACER, FRONT SHEAR DEP | 28 |
| | – | 2 | 2 | 2 | 2 | 2 | 2 | 1–22284–0 | SPRING, DRAG | 27 |
| | – | 1 | 1 | 1 | 1 | 1 | 1 | 356835–1 | LEVER, DRAG RELEASE | 26 |
| | – | 1 | 1 | 1 | 1 | 1 | 1 | 240792–1 | DRAG, TERMINAL | 25 |
| | – | 1 | 1 | 1 | 1 | 1 | 1 | 1320928–1 | PLATE, STRIP GUIDE | 24 |
| | – | 1 | 1 | 1 | 1 | 1 | 1 | 980371–4 | SCR,SHC SHLD | 23 |
| | – | 1 | – | 1 | 1 | – | 1 | 1–690472–4 | STRIPPER | 22 |
| | – | 1 | 1 | 1 | 1 | 1 | 1 | 1–18023–1 | SCR,SHC(M4X10)STRIPPER | 21 |
| | – | 4 | 4 | 4 | 4 | 4 | 4 | 18025–2 | WASHER,LOCK(M4)STRIPPER | 20 |
| | – | – | 1 | – | – | 1 | – | 1–690472–9 | STRIPPER | 19 |
| | | | | | | | | | | 18 |
| (1) | – | 1 | – | – | 1 | – | – | 1338684–1 | HOLDER, SHEAR, FRONT (NO–CUT) | 17 |
| | | | | | | | | | | 16 |
| | | | | | | | | | | 15 |
| | | | | | | | | | | 14 |
| | | | | | | | | | | 13 |
| | – | 1 | 1 | 1 | 1 | 1 | 1 | 3–22280–3 | SPRING, SHEAR | 12 |
| | – | 1 | 1 | 1 | 1 | 1 | 1 | 356885–4 | STOP, SHEAR | 11 |
| (3) | – | – | 1 | 1 | – | 1 | 1 | 1320921–1 | HOLDER, SHEAR, FRONT (CUT) | 10 |
| | – | 1 | 1 | 1 | 1 | 1 | 1 | 462006–1 | SHEAR, FLOAT (FRONT) | 9 |
| | 1 | 2 | 2 | 2 | 1 | 1 | 1 | 7–1333225–1 | ANVIL | 8 |
| | – | 1 | 1 | 1 | 1 | 1 | 1 | 3–240641–4 | SPACER, DEPRESSOR (REAR) | 7 |
| | | | | | | | | | | 6 |
| | – | 1 | 1 | 1 | 1 | 1 | 1 | 2–455889–4 | DEPRESSOR, SHEAR (FRONT) | 5 |
| | – | 1 | 1 | 1 | 1 | 1 | 1 | 238011–4 | SPACER, BLOCK CRIMPER | 4 |
| (1) | 1 | 2 | 2 | 2 | 1 | 1 | 1 | 3–1583690–3 | CRIMPER, INSULATION | 3 |
| | – | 1 | 1 | 1 | 1 | 1 | 1 | 1–455888–0 | SPACER, CRIMPER | 2 |
| (1) | 1 | 2 | 2 | 2 | 1 | 1 | 1 | 1–856313–9 | CRIMPER, WIRE | 1 |
| | –77 | –76 | –72 | –71 | –6 | –2 | –1 | PART NO | DESCRIPTION | ITEM NO |
| | QTY REQD PER ASSY | | | | | | | | PARTS LIST | |

USED ON –

(1) RECOMMENDED SPARE PARTS.
2. GREASE RAM, CAM, CAM FOLLOWER AND FEED ROD LIGHTLY.
3. LUBRICATE DAILY PER THE APPLICATOR INSTRUCTION SHEET SUPPLIED WITH THE APPLICATOR.
(4) ALL CRIMP DATA SUPPLIED BY TERMINAL MANUFACTURER.
(5) CUT TO LENGTH ON ASSEMBLY AS REQUIRED.

### VIEW B ROTATED 180°

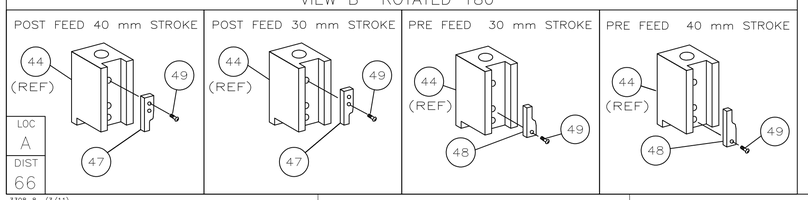


## * WARNING:

ON INSTALLATION, SET WIRE DISC TO LARGEST WIRE SIZE SETTING. USE OF SETTINGS BELOW MIN REQUIRED CRIMP HEIGHT SETTING WILL CAUSE DAMAGE TO CRIMP TOOLING.

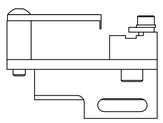

| P | LTR | REVISION RECORD | DATE | DWN | APVD |
|---|---|---|---|---|---|
| | C1 | ECR–13–008359 | 5–2013 | MY | TE |

DIMENSIONS: INCHES

TOLERANCES UNLESS OTHERWISE SPECIFIED:
0 PLC ± –
1 PLC ± –
2 PLC ± –
3 PLC ± –
4 PLC ± –
ANGLES ± –
SURFACE TEXTURE

| | | | |
|---|---|---|---|
| DWN L.LOFTHOUSE | 15MAR05 | MATERIAL – – | HEAT TREAT – – |
| CHK – | | | |
| APVD F.BACKHURST | 15MAR05 | TE Connectivity | |
| NAME FINE ADJ SIDE FD HD–I APPL | | | |
| SCALE – | SIZE A1 | DRAWING NO 1528520 | SHEET 1 OF 1 REV C1 |

CUSTOMER ACCESSIBLE PRODUCTION DRAWING

THIS INFORMATION IS CONFIDENTIAL AND PROPRIETARY TO TYCO ELECTRONICS CORPORATION AND ITS WORLDWIDE SUBSIDIARIES AND AFFILIATES (COLLECTIVELY "TE"). IT MAY BE DISCLOSED ONLY TO THOSE THAN TE PERSONNEL, WITHOUT AUTHORIZATION FROM TE (www.TE.com).

3308–8 (3/11)