SHEET OF

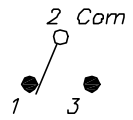

CIRCUIT: SPDT
CONTACT CONFIGURATION

SWITCH FUNCTION		
POS. 1	POS. 2	POS. 3
ON	OFF	ON
2-3	OPEN	2-1

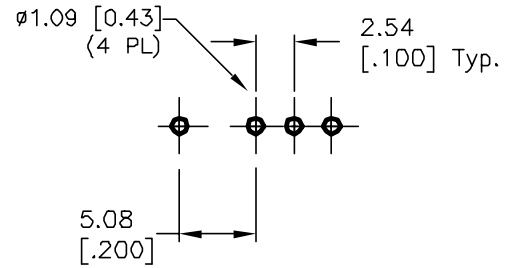

RECOMMENDED P.C.B. LAYOUT

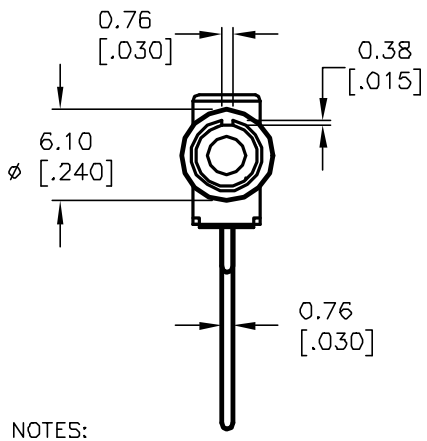

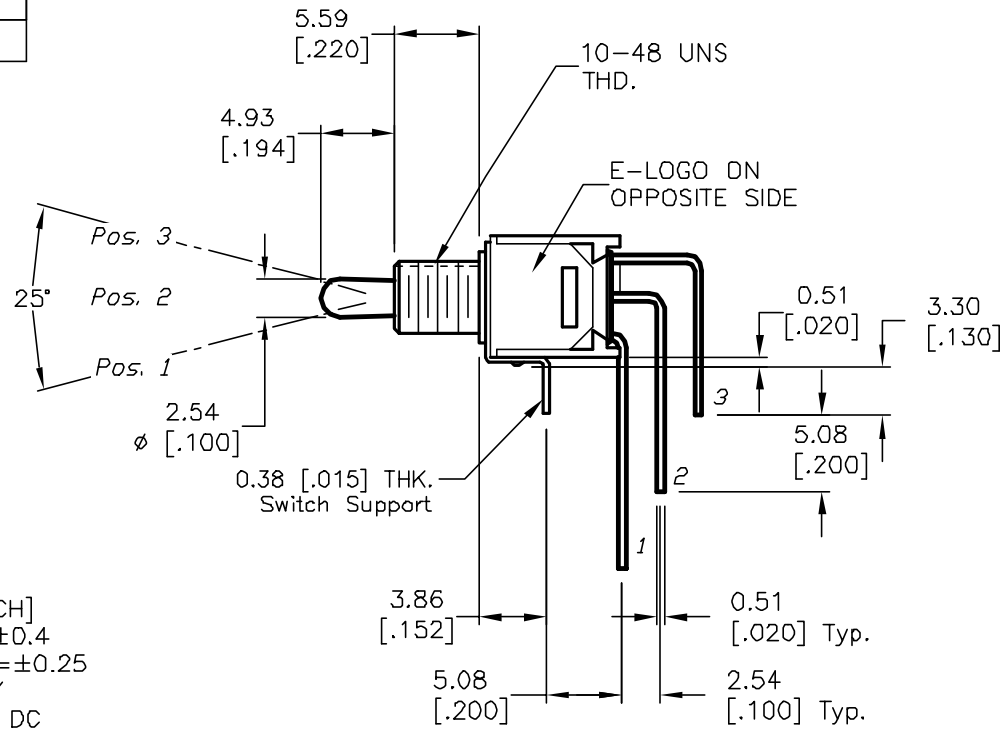

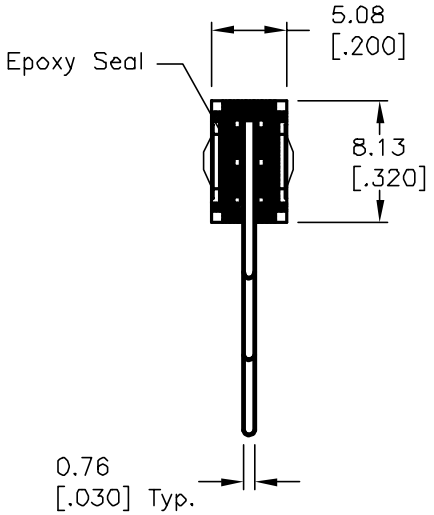

NOTES:

1. ALL DIMENSIONS IN MM [INCH]
2. GENERAL TOLERANCE: X.X=±0.4
   X.XX=±0.25
3. TERM. NOS. FOR REF. ONLY
4. RATING: 0.4VA @20V AC or DC
5. ▲ FIXED TERM. MOVING CONTACT:
   Copper Alloy w/GOLD plate over
   Nickel plate.
6. ELECTRICAL LIFE: 30,000 make-and-break cycle
   at full load.
7. DIELECTRIC STRENGTH: 1,000 V RMS @sea level.
8. OPERATING TEMP.: -30°C to 85°C
9. ▲ DESIGNATE MAJOR FEATURE:

REV.	ECN No.	DESCRIPTION	DATE	CHKD
B	12110	REVISED AND REDRAWN	5/3/02	CJB

THE INFORMATION CONTAINED IN THIS DOCUMENT IS PROPRIETARY TO E-SWITCH AND IS NOT TO BE COPIED OR TRANSFERRED

E-SWITCH®

TITLE 200 MSP-3 T2 B3 M7 R E (GOLD CONTACTS)

SCALE	DATE	DR	DWG	REV
2:1	5/3/02	CJB	T212010	B