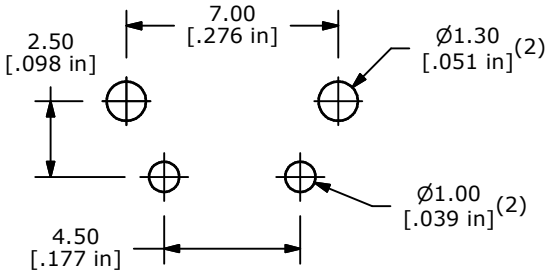

PC MOUNTING

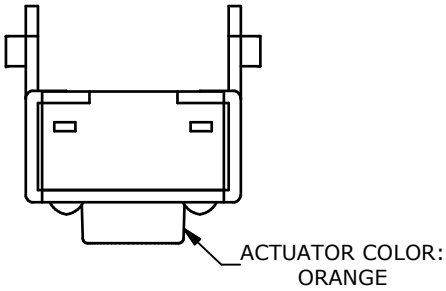

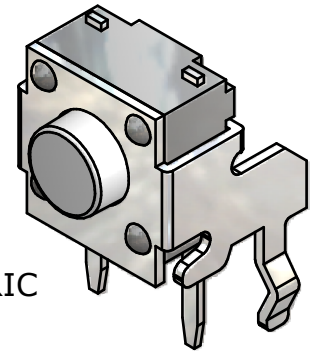

ISOMETRIC

CIRCUIT: SPST

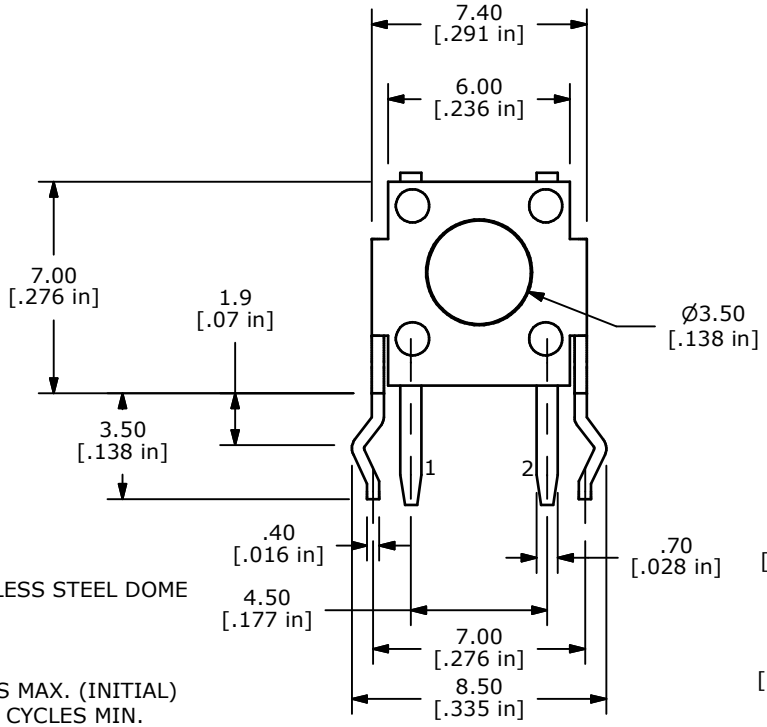

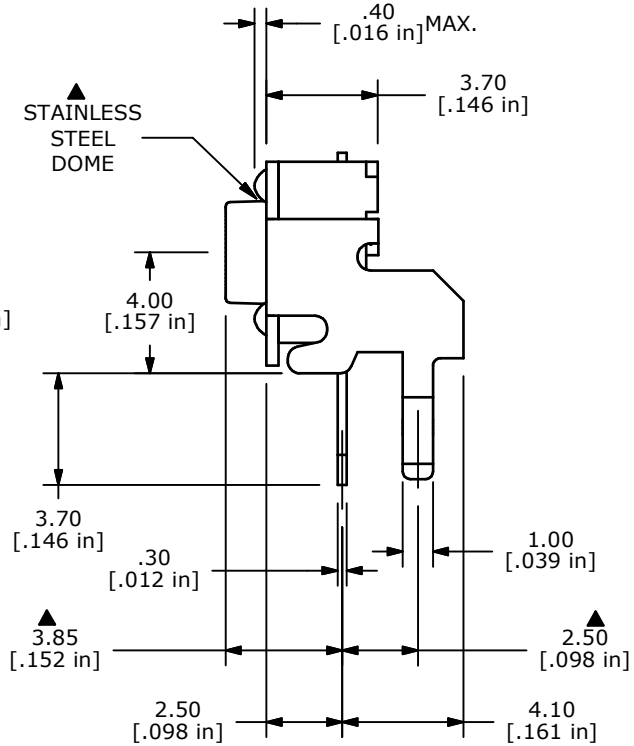

NOTES:
1. ALL DIMENSIONS IN MM
2. GENERAL TOLERANCE: X.X=±0.4
   X.XX=±0.25
3. TERM. NOS. FOR REFERENCE ONLY.
▲ 4. CONTACT MATERIAL: SILVER W/ STAINLESS STEEL DOME
▲ 5. RATING: 12VDC, 50mA
▲ 6. OPERATING FORCE: 230 ± 50 gms
7. TRAVEL: 0.25 +0.2/-0.1 mm
8. CONTACT RESISTANCE: 100 MILLI OHMS MAX. (INITIAL)
(B) 9. MECHANICAL/ELECTRICAL LIFE 500,000 CYCLES MIN.
10. ▲ DENOTES CRITICAL PARAMETER
11. 2002/95/EC (ROHS) COMPLIANT
▲12. PACKAGING: 1,000 PIECES PER REEL

REV	PCR NO	DESCRIPTION	DATE	BY
B	18853	REVISE LIFE EXPECTANCY (WAS 100,000)	2/5/10	BLR
A	18701	RELEASED FOR PRODUCTION	11/6/09	BLR

THE INFORMATION CONTAINED IN THIS DOCUMENT IS PROPRIETARY TO E-SWITCH AND IS NOT TO BE COPIED OR TRANSFERRED

E-SWITCH | LAMB INDUSTRIES

TITLE TL1105VF250QSSDOME

SCALE	DATE	DR	DWG	REV
4:1	2/5/2010	BLR	P010251	B